YAMAHA

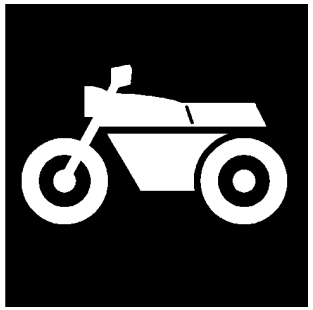

# 零件手冊

# NXC125LA ( 4C64 ) TAIWAN

YAMAHA
GENUINE
Parts & Accessories

1G4C6-414C1

( )

# 序言

這本零件手冊適用於本手冊封面上的機種，當你要訂購零件時，請參考這本零件手冊，並正確的引用部品番號和部品名稱。

1. 在本零件手冊發行後，若有修改、增訂或價格調整時，將會發佈部品通報，關於部品通報，請您必須及時的依通報更正您手中的零件手冊，以保持準確度。

2. 縮寫
   下列是使用在本零件手冊內的縮寫代號
   “UR” 依需要使用尺寸(厚度)及/或數
   “UN” 依實際需要而訂
   “AP” 選擇部品
   “LM” 當地製造
   “F#” 車台號碼(適當機器號碼)
   “O/S” 加大尺寸

3. 組立零件數量
   - 以組立總成形態供銷之零件，在零件名稱前空一個字母之空間，在此空間印有一個 ”.” 字號來表示。
   - 組立總成構成零件數之指示，登載每一個構成零件右邊之用量欄內，是每一個獨立組立總成單位中之數量

| 部品番號 | 部品名稱 | 用量 | 備註 |
|---|---|---|---|
| 2F5–83310–60 | 前方向燈總成 | 2 | |
| 115–83311–60 | .方向燈燈泡 | 1 | |

4. 圖案色彩列於備註欄，如下

| 部品番號 | 部品名稱 | 用量 | 備註 |
|---|---|---|---|
| 1P3-XF151-00-0X | 前擋泥蓋 | 1 | 用於白/銀車 |
| 1P3-XF151-00-1X | 前擋泥蓋 | 1 | 用於銀/黑車 |

5. 請注意本手冊圖面僅用於參考尋找部品番號，不用於組裝， 若需要組裝資訊，請使用服務手冊。

6. 項次番號前若有星號(*)代表已在第一版後作項目修訂。

7. 適用編號

車台編號

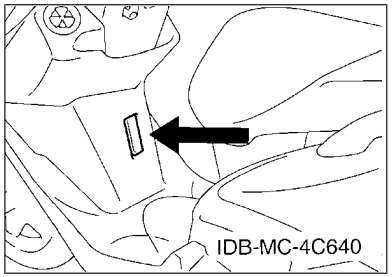


引擎編號

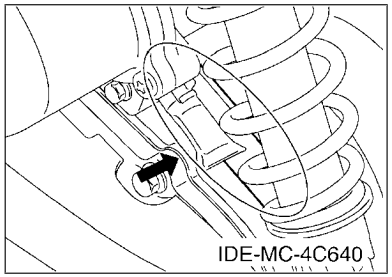


8. 顏色代碼 (記號(*)列出機種顏色)

| 簡稱 | 顏色（英文） | 顏色 | 顏色番號 |
|---|---|---|---|
| LGB | LOW GLOSS BLACK | 平光黑 | 0098 |
| NBM8(*) | GRAYISH BLUE METALLIC 8 | 深藍銀 | 1082 |
| PLGM3(*) | PALE LEAF GREEN METALLIC 3 | 黃銀 | 1119 |
| SMX(*) | BLACK METALLIC X | 黑銀 | 0903 |
| SW(*) | SILKY WHITE | 白銀 | 00GE |
| YB | YAMAHA BLACK | 山葉黑 | 0033 |
| | | | |
| | | | |
| | | | |
| | | | |

9. 適用起始打刻編號

車台編號

| 編號 | 用量欄 | 機種型式 |
|---|---|---|
| *LPRSE46109A230101* | | 4C64 |
| | | |
| | | |
| | | |
| | | |

引擎編號

| 編號 | 用量欄 | 機種型式 |
|---|---|---|
| E3B8E-230101 | | 4C64 |
| | | |
| | | |
| | | |
| | | |

# 機種資訊

10. 顏色資訊

| 機種型式 | 顏色型式代碼 | 顏色番號 | 顏色（英文） | 顏色 | 簡稱 |
|---|---|---|---|---|---|
| 4C64 | A | 0903 | BLACK METALLIC X | 黑銀 | SMX |
| | B | 00GE | SILKY WHITE | 白銀 | SW |
| | C | 1082 | GRAYISH BLUE METALLIC 8 | 深藍銀 | NBM8 |
| | D | 1119 | PALE LEAF GREEN METALLIC 3 | 黃銀 | PLGM3 |
| | | | | | |
| | | | | | |
| | | | | | |
| | | | | | |
| | | | | | |
| | | | | | |

# 目錄

## 引擎部品


汽缸頭.....1
曲軸,活塞.....2
閥門.....3
空氣進氣孔,風扇.....4
潤滑油泵.....5
空氣吸入口.....6
排氣裝置.....7
曲軸箱.....8
起動機構.....11
離合器.....12
傳動機構.....14


## 車體部品


車架.....15
前擋泥蓋.....17
側蓋.....18
後臂,懸吊系統.....20
前叉.....21
汽油箱.....24
座墊.....26
前輪.....28
前剎車卡鉗.....29
後輪.....30
轉向把手,鋼索.....31
前主缸.....32
支架,置腳踏.....33
腳防護板.....34
整流罩 1.....36
發電機.....37
起動馬達.....38
方向燈.....39
計量表.....40
前燈.....41
後燈.....42
把手開關,把手.....43
電裝 1.....44


## 索引


部品番號索引.....46

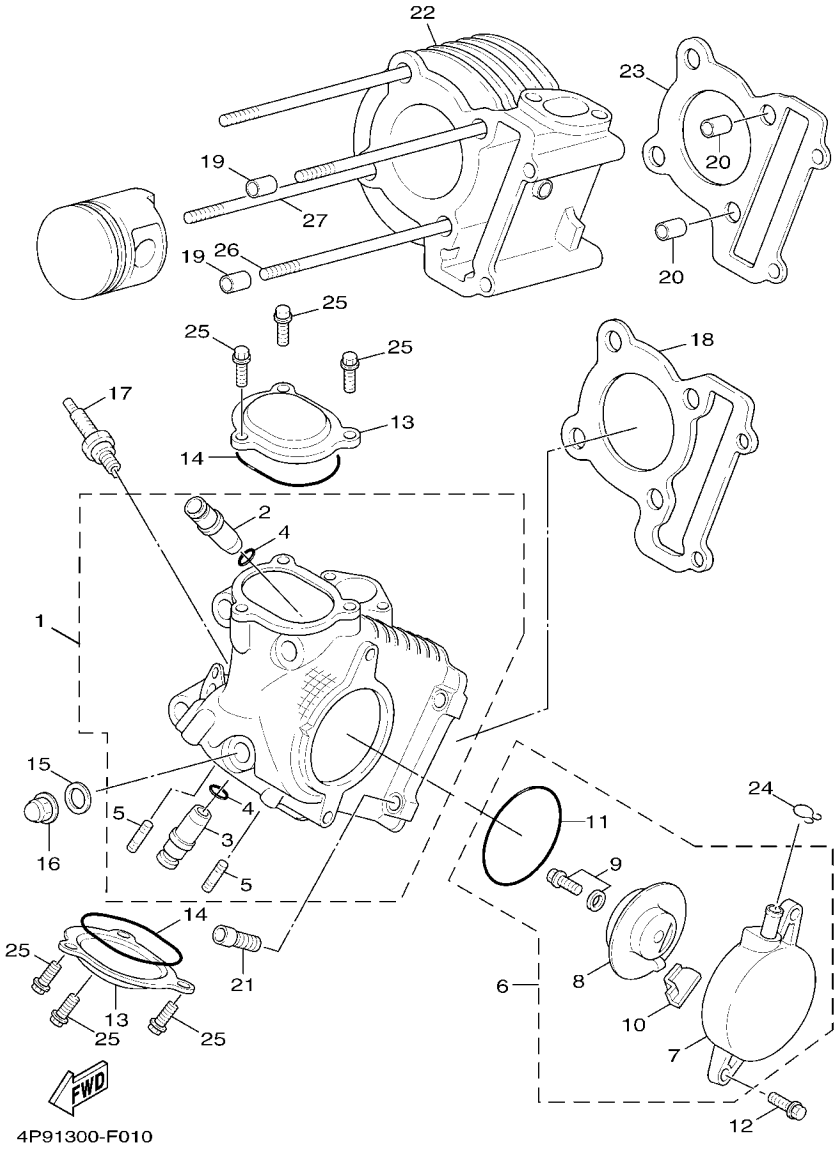


## FIG. 1 汽缸頭

| 項次 | 部品番號 | 部品名稱 | 4C64 | | | | | 備註 |
|---|---|---|---|---|---|---|---|---|
| 1 | 4P9–E1102–00 | 汽缸頭總成 | 1 | | | | | |
| 2 | 5ML–11133–10 | .進氣閥導管 | 2 | | | | | |
| 3 | 5ML–11134–10 | .排氣閥導管 | 2 | | | | | |
| 4 | 93210–09802 | .護油圈 | 4 | | | | | |
| 5 | 90116–08806 | .雙頭螺栓 | 2 | | | | | |
| 6 | 5ML–E1160–00 | 吸收器總成 | 1 | | | | | |
| 7 | 5ML–E1185–00 | .汽缸頭側蓋 | 1 | | | | | |
| 8 | 5ML–E1165–00 | .吸收器板 | 1 | | | | | |
| 9 | 97527–06512 | .六角螺栓附墊圈 | 1 | | | | | |
| 10 | 4CW–E1155–00 | .封圈 | 1 | | | | | |
| 11 | 93210–71462 | .護油圈 | 1 | | | | | |
| 12 | 95027–06020 | 凸緣螺栓 | 2 | | | | | |
| 13 | 5ML–E1186–00 | 汽缸頭側蓋 | 2 | | | | | |
| 14 | 93210–54008 | 護油圈 | 2 | | | | | |
| 15 | 90201–08609 | 平墊圈 | 4 | | | | | |
| 16 | 90176–08816 | 有蓋螺帽 | 4 | | | | | |
| 17 | 94700–00840 | 火星塞 | 1 | | | | | |
| 18 | 5ML–E1181–00 | 汽缸蓋墊片 | 1 | | | | | |
| 19 | 91810–14807 | 定位銷 | 2 | | | | | |
| 20 | 91810–14807 | 定位銷 | 2 | | | | | |
| 21 | 91317–06100 | 六角套頭螺栓 | 2 | | | | | |
| 22 | 5ML–Y1310–20 | 汽缸組 | 1 | | | | | |
| 23 | 5ML–E1351–20 | 汽缸墊片 | 1 | | | | | |
| 24 | 90467–13042 | 止夾 | 1 | | | | | |
| 25 | 95027–06016 | 凸緣螺栓 | 6 | | | | | |
| 26 | 5ML–E1391–00 | 雙頭螺栓 1 | 3 | | | | | |
| 27 | 5ML–E1392–00 | 雙頭螺栓 2 | 1 | | | | | |

## FIG. 2 曲軸,活塞

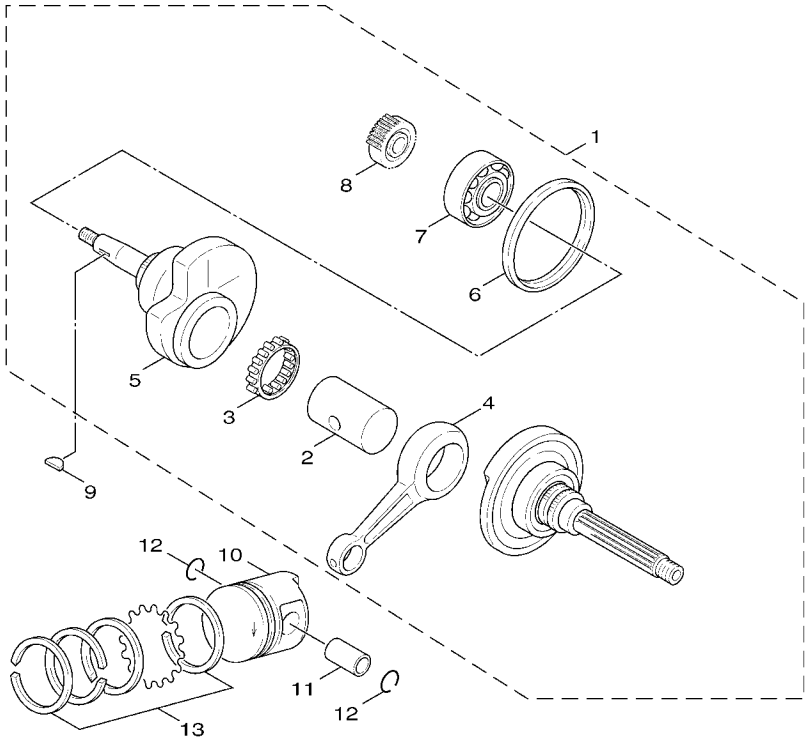

5TY5414-E020

| 項次 | 部品番號 | 部品名稱 | 4C64 | | | | | 備註 |
|---|---|---|---|---|---|---|---|---|
| 1 | 4C6–E1400–00 | 曲軸 | 1 | | | | | |
| 2 | 5ML–E1681–00 | .曲軸銷 | 1 | | | | | |
| 3 | 93310–528Y9 | .軸承 | 1 | | | | | |
| 4 | 5LW–E1651–00 | .連桿 | 1 | | | | | |
| 5 | 4C6–E1422–00 | .右曲軸 | 1 | | | | | |
| 6 | 5ML–E3452–00 | .蓋 | 1 | | | | | |
| 7 | 93306–372Y3 | .軸承 | 1 | | | | | |
| 8 | 5ML–E3324–00 | .驅動齒輪 | 1 | | | | | |
| 9 | 90280–03045 | 半圓鍵 | 1 | | | | | |
| 10 | 5ML–E1631–10 | 活塞 | 1 | | | | | |
| 11 | 5LW–E1633–00 | 銷 | 1 | | | | | |
| 12 | 93450–16068 | 夾環 | 2 | | | | | |
| 13 | 4C6–E1603–00 | 活塞環組 | 1 | | | | | |

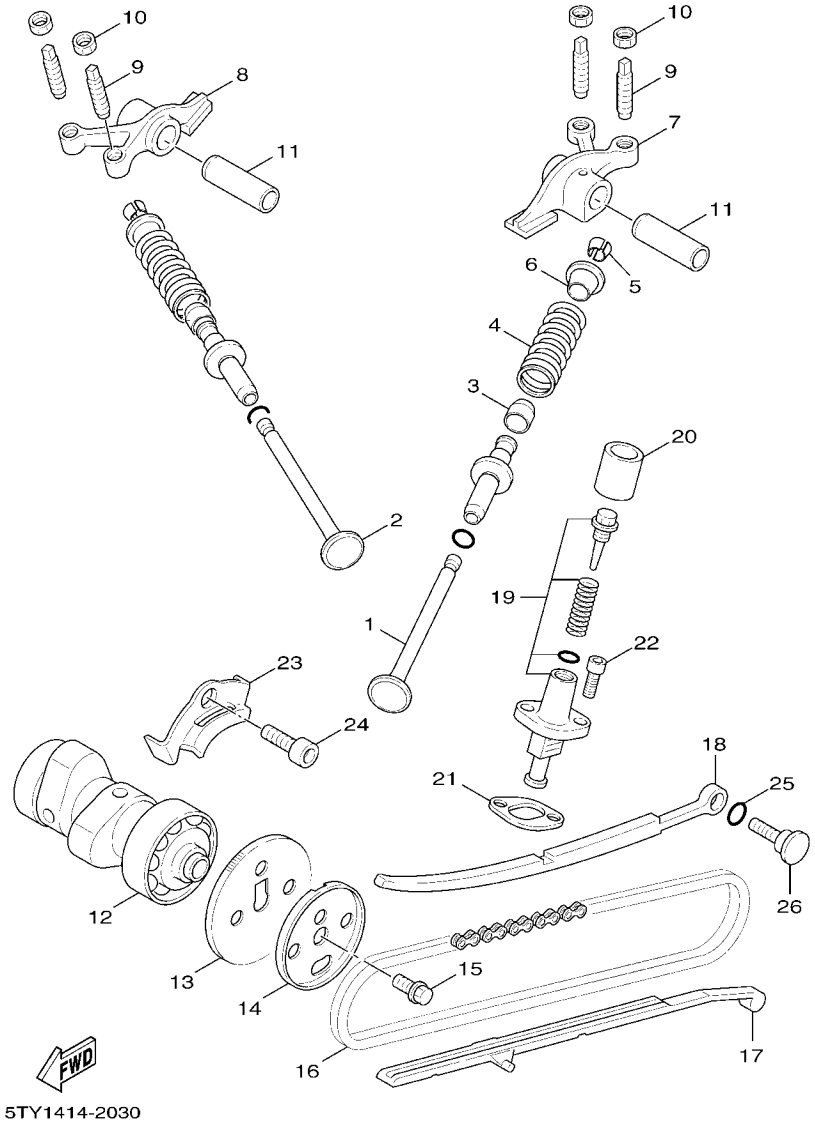


## FIG. 3 閥門

| 項次 | 部品番號 | 部品名稱 | 4C64 | | | | | 備註 |
|---|---|---|---|---|---|---|---|---|
| 1 | 4C6–E2111–00 | 進氣閥 | 2 | | | | | |
| 2 | 4C6–E2121–00 | 排氣閥 | 2 | | | | | |
| 3 | 5ML–E2119–00 | 氣門桿油封 | 4 | | | | | |
| 4 | 5ML–12113–00 | 彈簧 | 4 | | | | | |
| 5 | 5WG–E2118–00 | 閥門銷 | 8 | | | | | |
| 6 | 4C6–E2117–00 | 閥門彈簧鎖扣 | 4 | | | | | |
| 7 | 1P3–E2151–00 | 閥門搖臂 | 1 | | | | | |
| 8 | 1P3–E2161–00 | 搖臂 | 1 | | | | | |
| 9 | 5FM–E2159–00 | 閥門調節螺絲 | 4 | | | | | |
| 10 | 90170–05800 | 六角螺帽 | 4 | | | | | |
| 11 | 5HK–E2156–00 | 搖臂軸 | 2 | | | | | |
| 12 | 1P3–E2170–01 | 凸輪軸總成 | 1 | | | | | |
| 13 | 5LW–E2176–00 | 凸輪鏈輪 | 1 | | | | | |
| 14 | 5ML–E1145–00 | 吸收器板 | 1 | | | | | |
| 15 | 95817–08016 | 凸緣螺栓 | 1 | | | | | |
| 16 | 94568–75094 | 鍵條 | 1 | | | | | |
| 17 | 5ML–E2231–00 | 停止器導件 | 1 | | | | | |
| 18 | 5ML–E2241–00 | 停止器導件 | 1 | | | | | |
| 19 | 5ML–E2210–00 | 鍵條張力器 | 1 | | | | | |
| 20 | 5UA–E2232–00 | 防震墊 | 1 | | | | | |
| 21 | 4DH–E2213–01 | 墊片 | 1 | | | | | |
| 22 | 91317–06016 | 六角套頭螺栓 | 2 | | | | | |
| 23 | 5ML–E111F–00 | 板 | 1 | | | | | |
| 24 | 91317–06012 | 六角套頭螺栓 | 1 | | | | | |
| 25 | 93210–15862 | 護油圈 | 1 | | | | | |
| 26 | 4CW–E2157–00 | 螺栓 | 1 | | | | | |

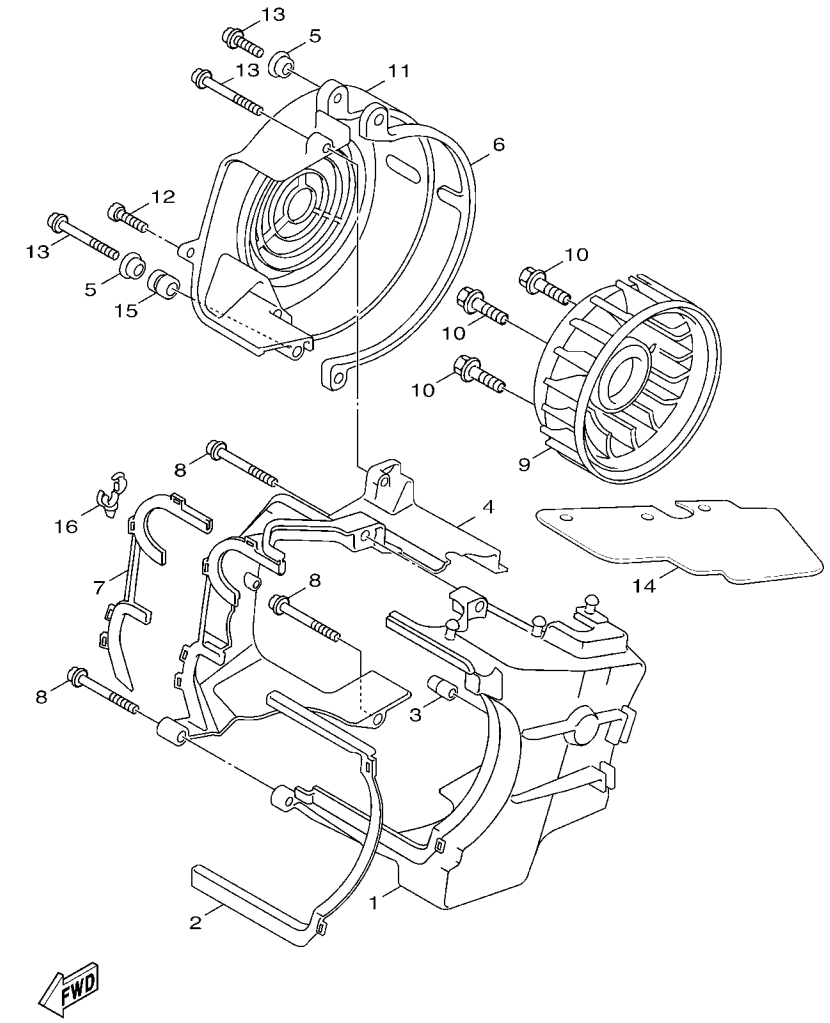


## FIG. 4 空氣進氣孔,風扇

| 項次 | 部品番號 | 部品名稱 | 4C64 | | | | | 備註 |
|---|---|---|---|---|---|---|---|---|
| 1 | 5ML–E2651–00 | 汽缸空氣進氣孔 | 1 | | | | | |
| 2 | 5ML–E2659–00 | 防震墊 | 1 | | | | | |
| 3 | 3KW–E3569–00 | 堵塞 | 1 | | | | | |
| 4 | 4C6–E2652–00 | 汽缸空氣進氣孔 | 1 | | | | | |
| 5 | 90387–068F9 | 軸環 | 3 | | | | | |
| 6 | 5ML–E2658–00 | 防震墊 | 1 | | | | | |
| 7 | 5ML–E2668–00 | 防震墊 | 1 | | | | | |
| 8 | 97707–60530 | 攻螺絲 | 5 | | | | | |
| 9 | 5TY–E2611–00 | 風扇 | 1 | | | | | |
| 10 | 90119–06857 | 六角套頭螺栓 | 4 | | | | | |
| 11 | 5ML–E2653–01 | 汽缸空氣進氣孔 | 1 | | | | | |
| 12 | 97707–60516 | 攻螺絲 | 1 | | | | | |
| 13 | 97607–06220 | 六角螺栓附墊圈 | 3 | | | | | |
| 14 | 5ML–E2682–01 | 護板 | 1 | | | | | |
| 15 | 90480–12497 | 索環 | 1 | | | | | |
| 16 | 90464–10800 | 夾 | 1 | | | | | |

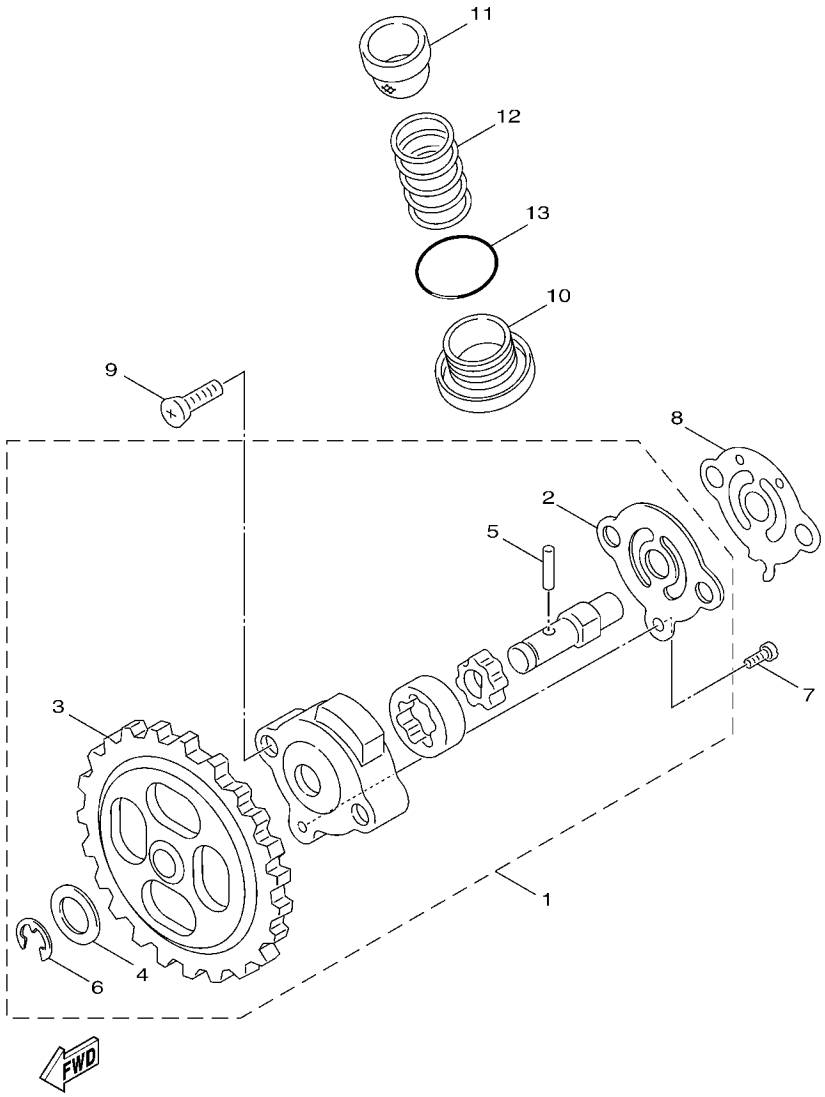


## FIG. 5 潤滑油泵

| 項次 | 部品番號 | 部品名稱 | 4C64 | | | | | 備註 |
|---|---|---|---|---|---|---|---|---|
| 1 | 1P3–E3300–00 | 潤滑油泵總成 | 1 | | | | | |
| 2 | 1P3–E3316–00 | .簧片閥座 | 1 | | | | | |
| 3 | 1P3–E3325–00 | .驅動齒輪 | 1 | | | | | |
| 4 | 1P3–E3318–00 | .墊片 | 1 | | | | | |
| 5 | 1P3–E3362–00 | .軸環 | 1 | | | | | |
| 6 | 1P3–E3364–00 | .止夾 | 1 | | | | | |
| 7 | 5ST–E3365–00 | .平頭螺絲 | 1 | | | | | |
| 8 | 5ML–E3475–00 | 墊片 | 1 | | | | | |
| 9 | 98507–05020 | 盤頭螺絲 | 2 | | | | | |
| 10 | 5ML–E5351–20 | 排油塞 | 1 | | | | | |
| 11 | 5ML–E3411–00 | 過濾網 | 1 | | | | | |
| 12 | 90501–16004 | 壓力彈簧 | 1 | | | | | |
| 13 | 93210–29800 | 護油圈 | 1 | | | | | |

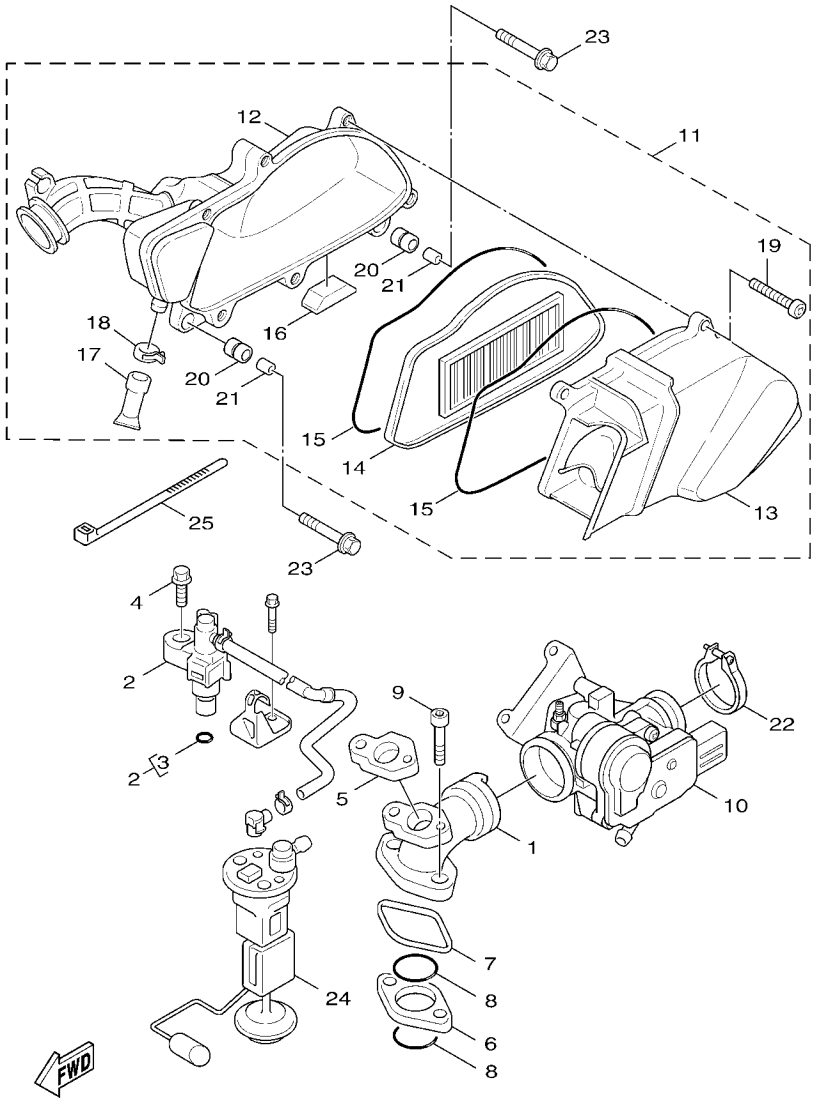


4C64414-G060

## FIG. 6 空氣吸入口

| 項次 | 部品番號 | 部品名稱 | 4C64 | | | | | 備註 |
|---|---|---|---|---|---|---|---|---|
| 1 | 4C6–E3585–00 | 歧管 | 1 | | | | | |
| 2 | 4C6–13930–00 | 噴射器總成 | 1 | | | | | |
| 3 | 5CA–14147–00 | .護油圈 | 1 | | | | | |
| 4 | 95817–06030 | 凸緣螺栓 | 1 | | | | | |
| 5 | 4P9–E3556–00 | 墊片 | 1 | | | | | |
| 6 | 4P9–E3595–01 | 接頭 | 1 | | | | | |
| 7 | 4P9–E4239–00 | 封圈 | 1 | | | | | |
| 8 | 93210–29802 | 護油圈 | 2 | | | | | |
| 9 | 90110–06256 | 六角套頭螺栓 | 2 | | | | | |
| 10 | 4C6–E3750–00 | 節流本體 | 1 | | | | | |
| 11 | 4C6–E4410–00 | 空氣濾清器總成 | 1 | | | | | |
| 12 | 4C6–E4408–00 | .空氣濾清器箱 | 1 | | | | | |
| 13 | 5TY–WE442–10 | .空氣濾清器箱組 2 | 1 | | | | | |
| 14 | 5TY–E4451–10 | .過濾網 | 1 | | | | | |
| 15 | 5TY–E4476–10 | .封圈 | 2 | | | | | |
| 16 | 5TY–E442G–10 | .防震墊 | 1 | | | | | |
| 17 | 5TY–E443E–10 | .排氣管 | 2 | | | | | |
| 18 | 90467–13813 | .止夾 | 2 | | | | | |
| 19 | 5TY–E4429–10 | .螺絲 | 6 | | | | | |
| 20 | 5TY–E4435–10 | .索環 | 2 | | | | | |
| 21 | 5TY–E4449–10 | .軸環 | 2 | | | | | |
| 22 | 4P9–E3575–00 | 束帶 | 1 | | | | | |
| 23 | 95807–06030 | 凸緣螺栓 | 2 | | | | | |
| 24 | 1P5–E3907–00 | 汽油泵浦總成 | 1 | | | | | |
| 25 | 90464–26800 | 夾 | 1 | | | | | |

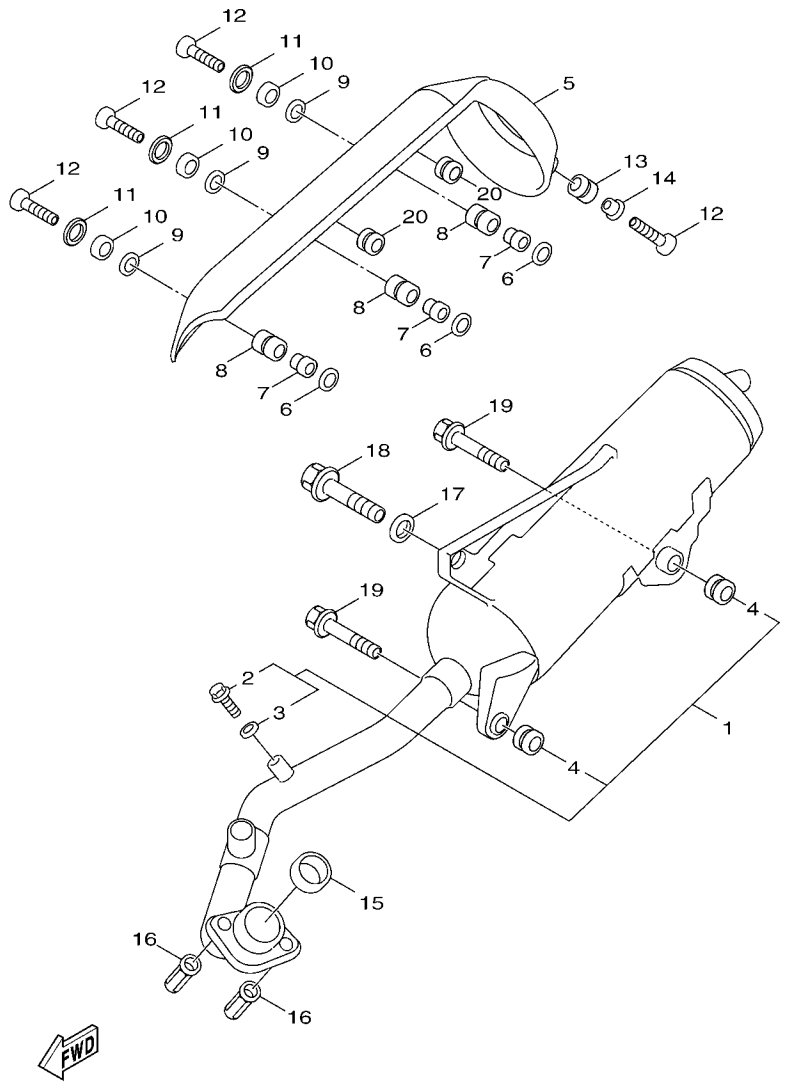


4C64414-G070

## FIG. 7 排氣裝置

| 項次 | 部品番號 | 部品名稱 | 4C64 | | | | | 備註 |
|---|---|---|---|---|---|---|---|---|
| 1 | 4C6–E4610–10–98 | 排氣管總成 | 1 | | | | | 平光黑 |
| 2 | 97080–06008 | .螺栓 | 1 | | | | | |
| 3 | 92990–06600 | .彈簧墊圈 | 1 | | | | | |
| 4 | 5ML–E4737–10 | .排氣管防震墊 | 2 | | | | | |
| 5 | 4C6–E4708–10 | 保護罩總成 | 1 | | | | | |
| 6 | 4CW–E4766–00 | 墊圈 | 3 | | | | | |
| 7 | 5JS–E4779–00 | 軸環 | 3 | | | | | |
| 8 | 5JS–E4445–00 | 索環 | 3 | | | | | |
| 9 | 5JS–E4759–00 | 墊圈 | 3 | | | | | |
| 10 | 5JS–E4617–00 | 墊圈 | 3 | | | | | |
| 11 | 90201–06055 | 平墊圈 | 3 | | | | | |
| 12 | 90111–06801 | 螺栓 | 4 | | | | | |
| 13 | 90387–06737 | 軸環 | 1 | | | | | |
| 14 | 90480–12809 | 索環 | 1 | | | | | |
| 15 | 5SK–E4613–00 | 排氣管墊片 1 | 1 | | | | | |
| 16 | 90179–08804 | 螺帽 | 2 | | | | | |
| 17 | 90201–101J1 | 平墊圈 | 1 | | | | | |
| 18 | 95817–10035 | 凸緣螺栓 | 1 | | | | | |
| 19 | 90105–08835 | 墊圈座帽螺栓 | 2 | | | | | |
| 20 | 90480–10332 | 索環 | 2 | | | | | |

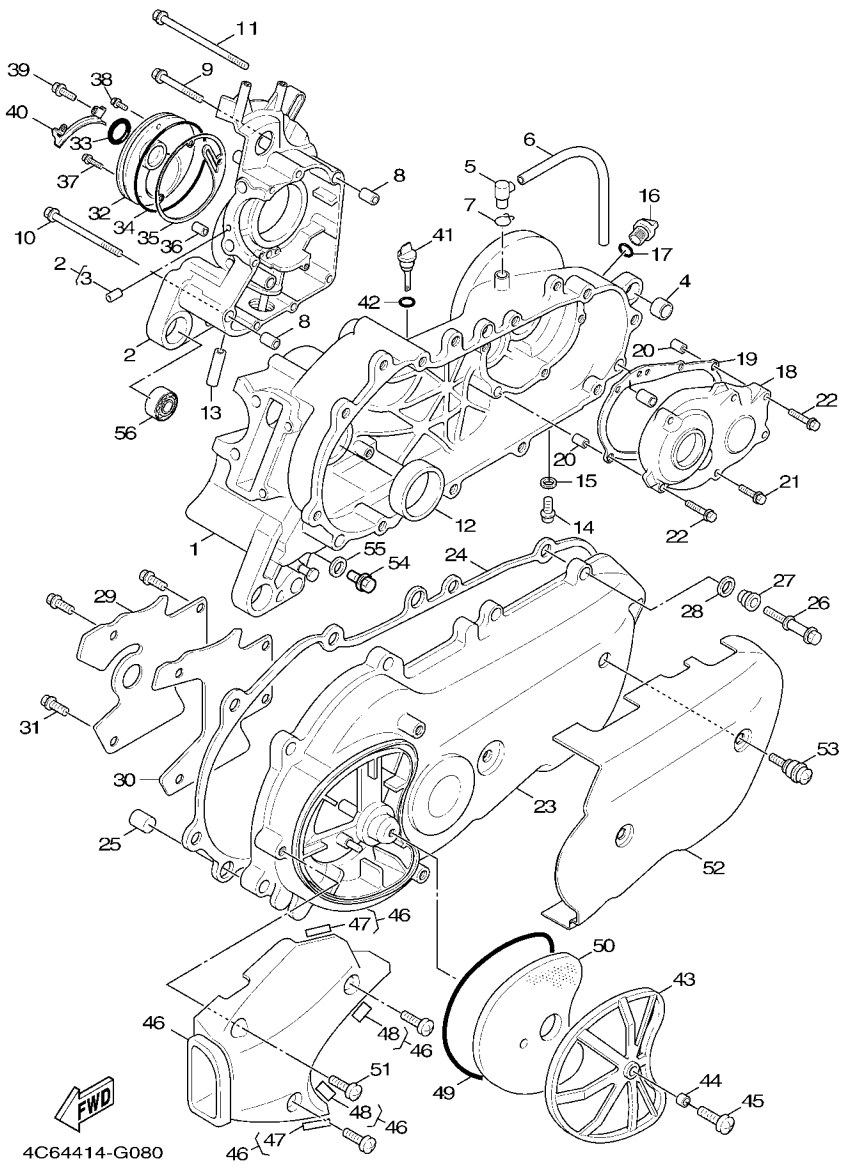


## FIG. 8 曲軸箱

| 項次 | 部品番號 | 部品名稱 | 4C64 | | | | | 備註 |
|---|---|---|---|---|---|---|---|---|
| 1 | 5ML–E5111–00 | 左曲軸箱 | 1 | | | | | |
| 2 | 5ML–WE512–01 | 右曲軸箱總成 | 1 | | | | | |
| 3 | 5ML–E5138–00 | .噴嘴 | 1 | | | | | |
| 4 | 4X6–F2216–00 | 後緩衝器襯套 | 1 | | | | | |
| 5 | 5CA–E5371–00 | 溢氣管 | 1 | | | | | |
| 6 | 90446–13803 | 管 | 1 | | | | | |
| 7 | 90467–12052 | 止夾 | 1 | | | | | |
| 8 | 91810–14807 | 定位銷 | 2 | | | | | |
| 9 | 90105–06808 | 墊圈座帽螺栓 | 6 | | | | | |
| 10 | 90105–06810 | 墊圈座帽螺栓 | 1 | | | | | |
| 11 | 90105–06817 | 墊圈座帽螺栓 | 1 | | | | | |
| 12 | 93102–22843 | 油封 | 1 | | | | | |
| 13 | 5ML–E3416–00 | 油管 | 1 | | | | | |
| 14 | 95817–08016 | 凸緣螺栓 | 1 | | | | | |
| 15 | 90430–08816 | 墊片 | 1 | | | | | |
| 16 | 4Y4–E5363–00 | 油塞 | 1 | | | | | |
| 17 | 93210–14805 | 護油圈 | 1 | | | | | |
| 18 | 5ML–E5421–00 | 曲軸箱蓋 2 | 1 | | | | | |
| 19 | 5ML–E5461–00 | 曲軸箱蓋墊片 2 | 1 | | | | | |
| 20 | 91810–14807 | 定位銷 | 2 | | | | | |
| 21 | 90110–06813 | 六角套頭螺栓 | 6 | | | | | |
| 22 | 90110–06815 | 六角套頭螺栓 | 2 | | | | | |
| 23 | 4C6–E5411–00 | 曲軸箱蓋 1 | 1 | | | | | |
| 24 | 5ML–E5451–00 | 左曲軸箱蓋墊片 | 1 | | | | | |
| 25 | 93610–20800 | 定位銷 | 2 | | | | | |
| 26 | 5ML–E5481–00 | 螺栓 | 10 | | | | | |
| 27 | 5ML–E5422–00 | 襯套 | 10 | | | | | |

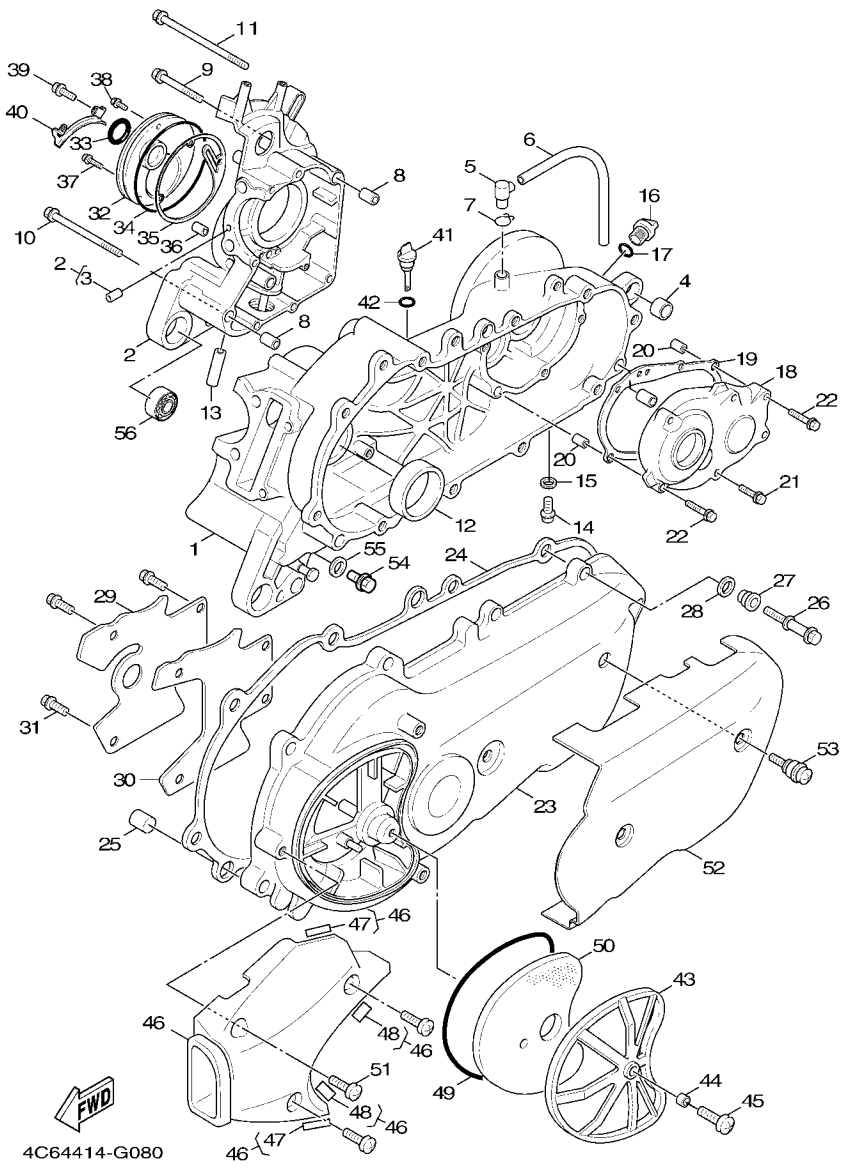


## FIG. 8 曲軸箱

| 項次 | 部品番號 | 部品名稱 | 4C64 | | | | | 備註 |
|---|---|---|---|---|---|---|---|---|
| 28 | 5ML–E5158–00 | 墊圈 | 10 | | | | | |
| 29 | 5ML–E5191–00 | 板 | 1 | | | | | |
| 30 | 5ML–E5455–00 | 墊片 | 1 | | | | | |
| 31 | 95027–06010 | 凸緣螺栓 | 4 | | | | | |
| 32 | 5ML–E5417–00 | 蓋 | 1 | | | | | |
| 33 | 93102–19293 | 油封 | 1 | | | | | |
| 34 | 93211–07801 | 護油圈 | 1 | | | | | |
| 35 | 5ML–E5453–00 | 墊片 | 1 | | | | | |
| 36 | 99480–05010 | 銷 | 1 | | | | | |
| 37 | 90105–06809 | 墊圈座帽螺栓 | 2 | | | | | |
| 38 | 90105–06807 | 墊圈座帽螺栓 | 1 | | | | | |
| 39 | 90105–06806 | 墊圈座帽螺栓 | 1 | | | | | |
| 40 | 5ML–E5113–00 | 板 | 1 | | | | | |
| 41 | 4C6–E5362–00 | 油標塞 | 1 | | | | | |
| 42 | 5ML–E3769–00 | 護油圈 | 1 | | | | | |
| 43 | 5ML–E5404–00 | 導件 | 1 | | | | | |
| 44 | 90387–06819 | 軸環 | 1 | | | | | |
| 45 | 98907–06016 | 有帽螺絲 | 1 | | | | | |
| 46 | 5ML–XE547–00 | 導管 | 1 | | | | | |
| 47 | 5ML–E5338–00 | .防震墊 | 2 | | | | | |
| 48 | 5ML–E5328–00 | .隔筒 | 2 | | | | | |
| 49 | 5ML–E5472–00 | 橡皮墊圈 | 1 | | | | | |
| 50 | 5ML–E5407–00 | 過濾器 | 1 | | | | | |
| 51 | 98907–06020 | 有帽螺絲 | 3 | | | | | |
| 52 | 4C6–XE543–00 | 曲軸箱蓋組 | 1 | | | | | |
| 53 | 4DM–E5481–00 | 螺栓 | 2 | | | | | |
| 54 | 90340–12802 | 排油塞 | 1 | | | | | |

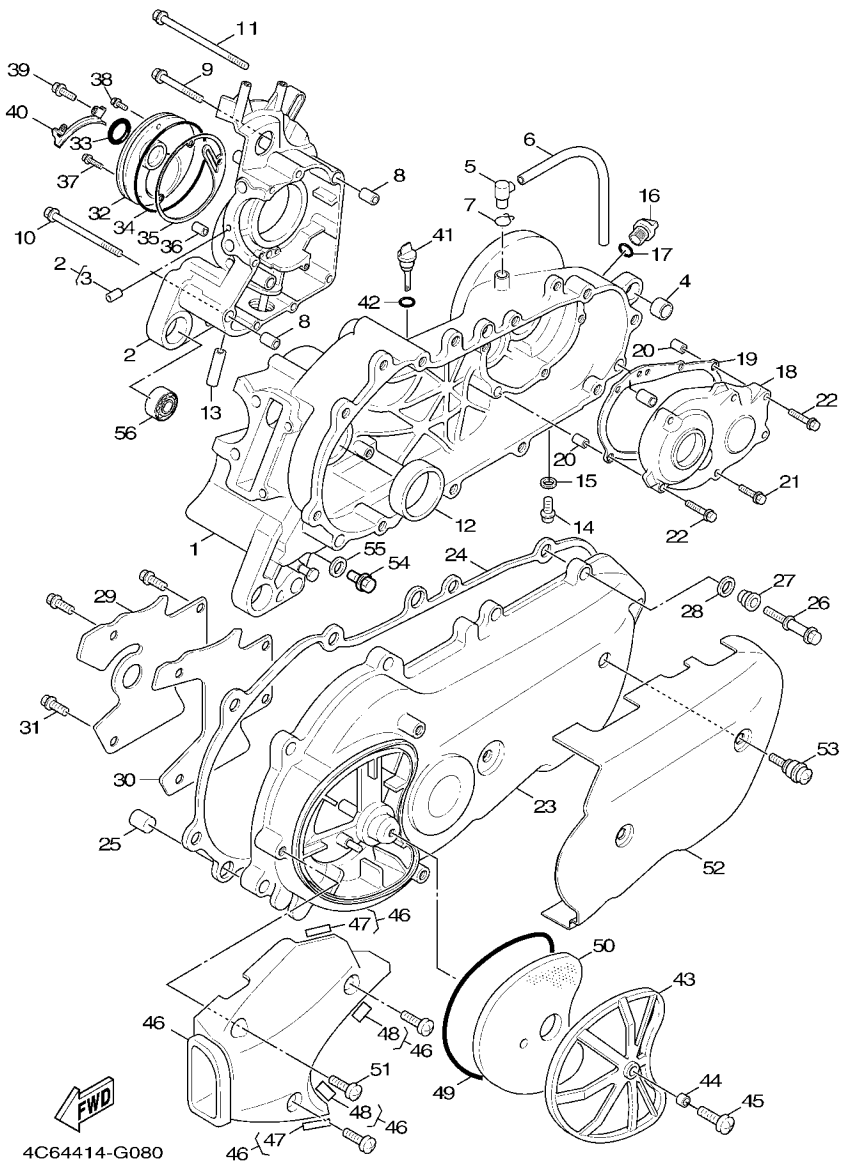


## FIG. 8 曲軸箱

| 項次 | 部品番號 | 部品名稱 | 4C64 | | | | | 備註 |
|---|---|---|---|---|---|---|---|---|
| 55 | 90201–12172 | 平墊圈 | 1 | | | | | |
| 56 | 93306–003Y4 | 軸承 | 2 | | | | | |

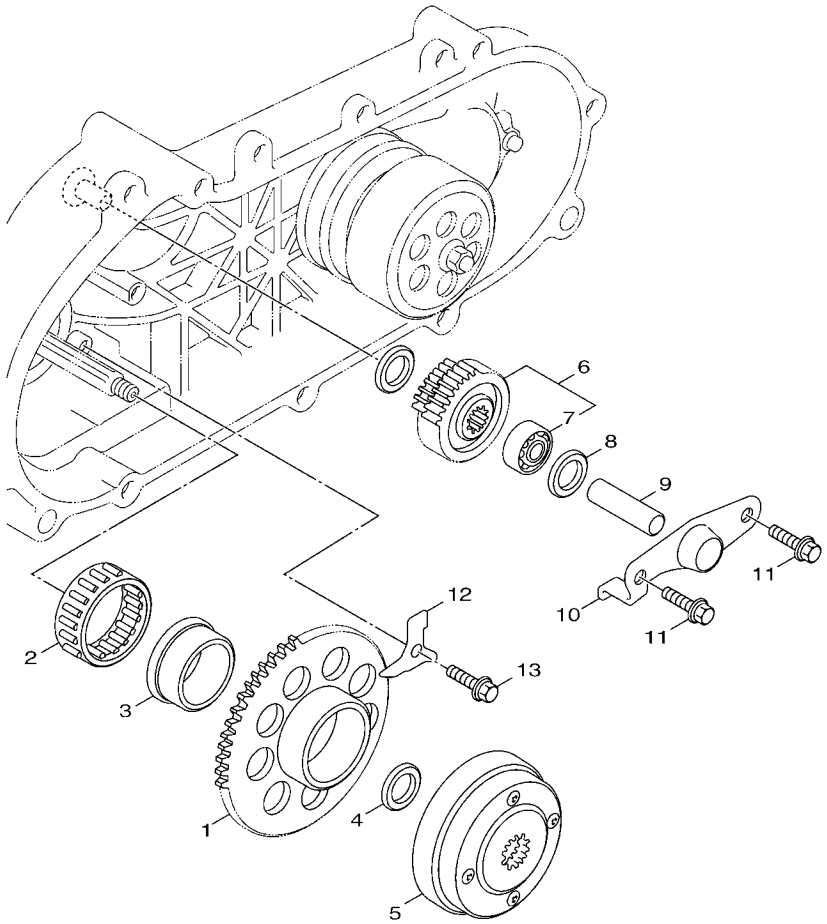

4C64414-G090

## FIG. 9 起動機構

| 項次 | 部品番號 | 部品名稱 | 4C64 | | | | | 備註 |
|---|---|---|---|---|---|---|---|---|
| 1 | 5TY–E5524–00 | 起動輪 | 1 | | | | | |
| 2 | 93310–450X2 | 軸承 | 1 | | | | | |
| 3 | 5LW–E5538–00 | 齒輪轂 | 1 | | | | | |
| 4 | 90201–16802 | 平墊圈 | 1 | | | | | |
| 5 | 5TY–E5570–01 | 起動離合器總成 | 1 | | | | | |
| 6 | 5ML–E5650–00 | 惰齒輪總成 | 1 | | | | | |
| 7 | 93315–110Y6 | 軸承 | 1 | | | | | |
| 8 | 5CA–E5521–00 | 軸 1 | 1 | | | | | |
| 9 | 90201–108A3 | 平墊圈 | 2 | | | | | |
| 10 | 5ML–E5532–00 | 惰齒輪板 | 1 | | | | | |
| 11 | 95027–06012 | 凸緣螺栓 | 2 | | | | | |
| 12 | 5TY–E5645–00 | 墊片 | 1 | | | | | |
| 13 | 95027–06012 | 凸緣螺栓 | 1 | | | | | |

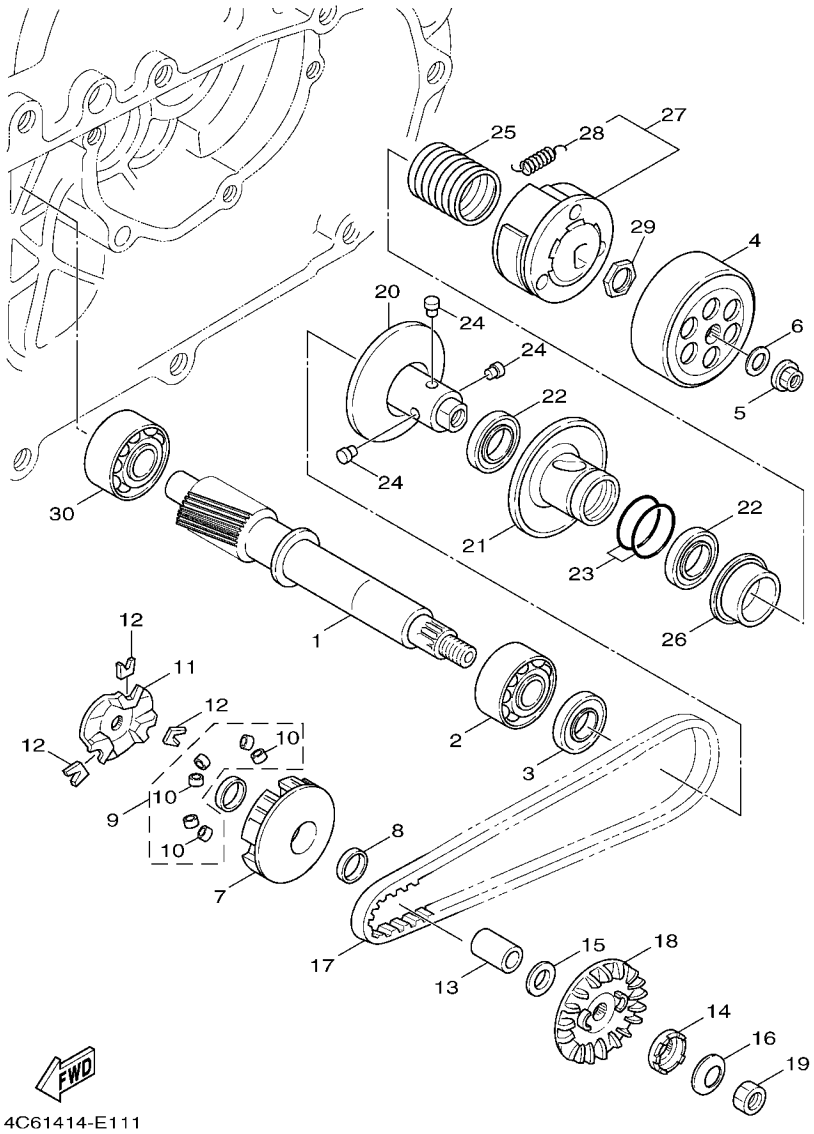


## FIG. 10 離合器

| 項次 | 部品番號 | 部品名稱 | 4C64 | | | | | 備註 |
|---|---|---|---|---|---|---|---|---|
| 1 | 5ML–E6111–01 | 主驅動齒輪 | 1 | | | | | |
| 2 | 93306–27210 | 軸承 | 1 | | | | | |
| 3 | 93102–22820 | 油封 | 1 | | | | | |
| 4 | 4CW–E6611–00 | 離合器殼整體 | 1 | | | | | |
| 5 | 90179–14427 | 螺帽 | 1 | | | | | |
| 6 | 90201–144M8 | 平墊圈 | 1 | | | | | |
| 7 | 5ML–E7620–02 | 主滑動槽輪整體 | 1 | | | | | |
| 8 | 93109–21800 | 油封 | 2 | | | | | |
| 9 | 5ML–WE763–00 | 滾珠組 | 1 | | | | | |
| 10 | 5ML–E7632–00 | .滾珠 | 6 | | | | | |
| 11 | 5ML–E7623–00 | 凸輪 | 1 | | | | | |
| 12 | 4CW–E7653–00 | 滑件 | 3 | | | | | |
| 13 | 90387–16801 | 軸環 | 1 | | | | | |
| 14 | 5ML–E5657–00 | 單向離合器 | 1 | | | | | |
| 15 | 90208–12050 | 錐形彈簧墊圈 | 1 | | | | | |
| 16 | 90201–16802 | 平墊圈 | 1 | | | | | |
| 17 | 4C6–E7641–00 | 皮帶 | 1 | | | | | |
| 18 | 4HP–E7611–00 | 主固定槽輪 | 1 | | | | | |
| 19 | 95307–12700 | 六角螺帽 | 1 | | | | | |
| 20 | 4C6–E7660–00 | 副固定槽輪 | 1 | | | | | |
| 21 | 4C6–E7670–00 | 副滑動槽輪 | 1 | | | | | |
| 22 | 93104–41801 | 油封 | 2 | | | | | |
| 23 | 93210–43800 | 護油圈 | 2 | | | | | |
| 24 | 4CW–E7664–00 | 導銷 | 3 | | | | | |
| 25 | 90501–43801 | 壓力彈簧 | 1 | | | | | |
| 26 | 5TY–E7644–01 | 彈簧座 | 1 | | | | | |
| 27 | 1P5–E6620–01 | 離合器牽轉具總成 | 1 | | | | | |

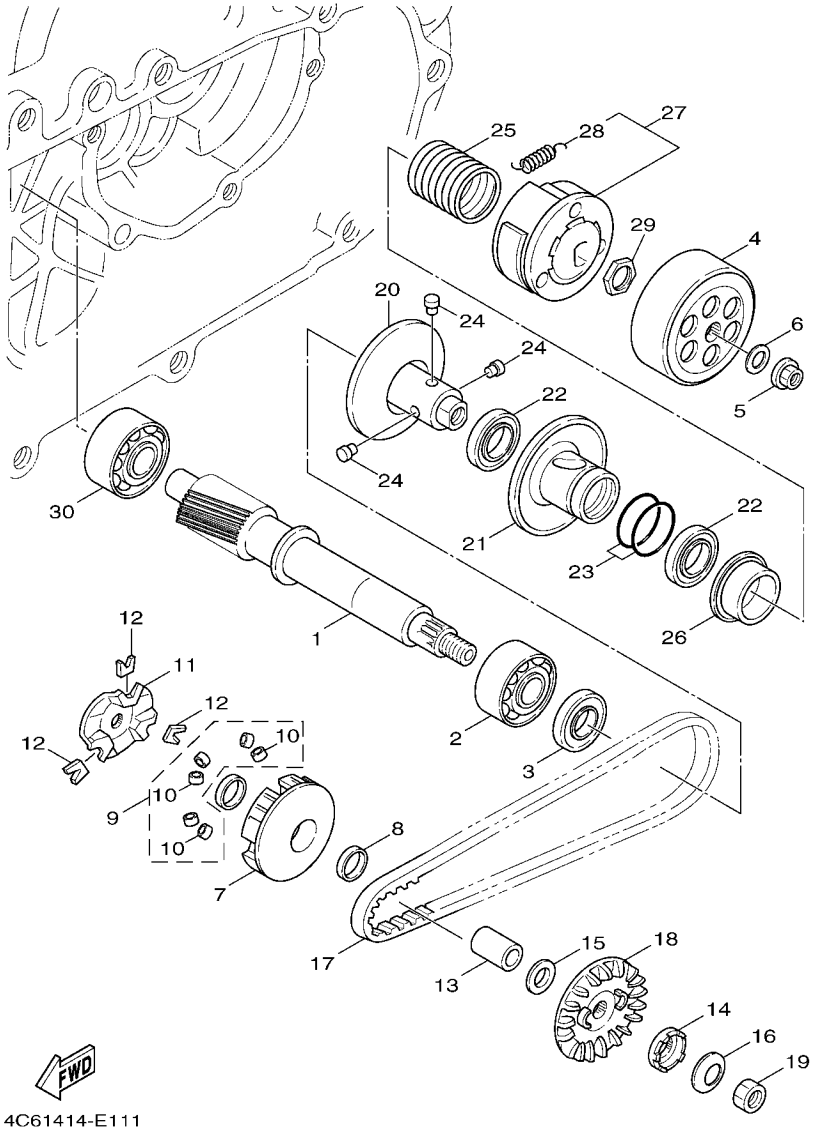


## FIG. 10 離合器

| 項次 | 部品番號 | 部品名稱 | 4C64 | | | | | 備註 |
|---|---|---|---|---|---|---|---|---|
| 28 | 1P5–E6626–00 | .離合器回位彈簧 | 3 | | | | | |
| 29 | 90170–36279 | 六角螺帽 | 1 | | | | | |
| 30 | 93306–203XA | 軸承 | 1 | | | | | |

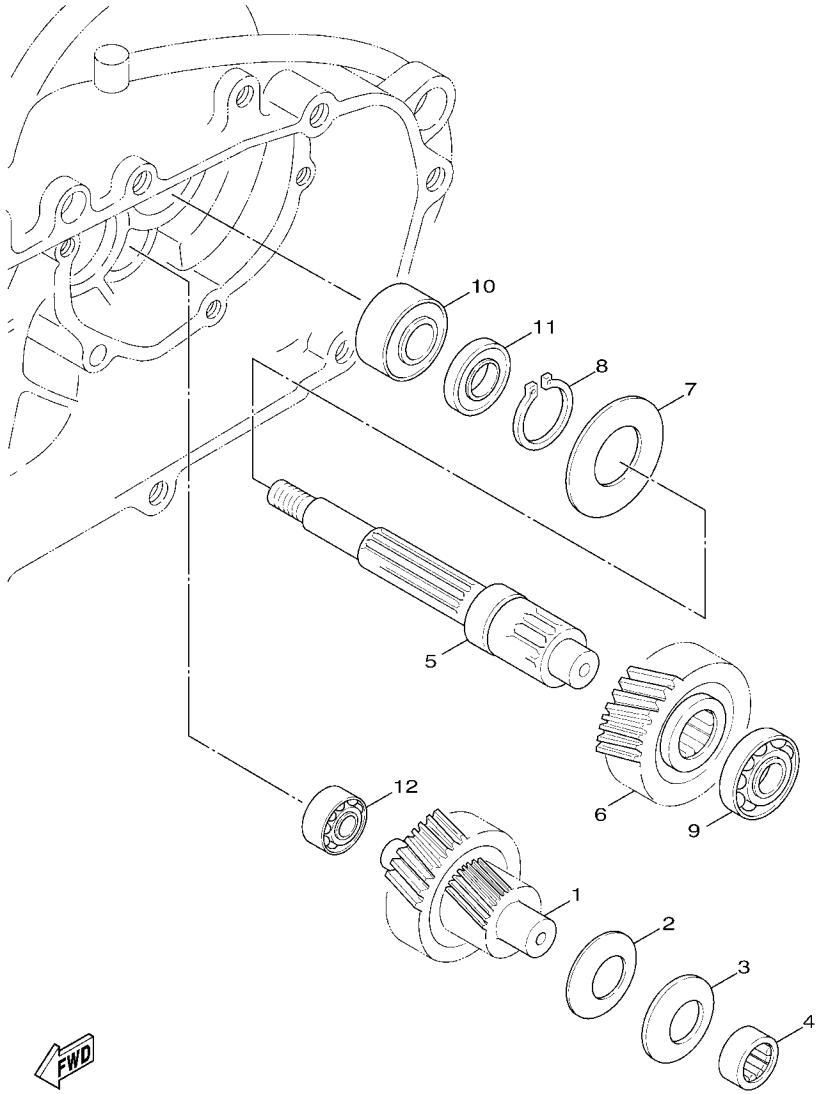


5TY1414-2120

## FIG. 11 傳動機構

| 項次 | 部品番號 | 部品名稱 | 4C64 | | | | | 備註 |
|---|---|---|---|---|---|---|---|---|
| 1 | 5ML–E7410–01 | 主軸總成 | 1 | | | | | |
| 2 | 90201–15803 | 平墊圈 | 1 | | | | | |
| 3 | 90208–15801 | 錐形彈簧墊圈 | 1 | | | | | |
| 4 | 93311–315Y2 | 軸承 | 1 | | | | | |
| 5 | 5ML–E7421–01 | 驅動軸 | 1 | | | | | |
| 6 | 5ML–E7211–01 | 1 檔從動齒輪 | 1 | | | | | |
| 7 | 90208–25800 | 錐形彈簧墊圈 | 1 | | | | | |
| 8 | 99009–25400 | 夾環 | 1 | | | | | |
| 9 | 93306–303Y8 | 軸承 | 1 | | | | | |
| 10 | 93306–204YH | 軸承 | 1 | | | | | |
| 11 | 93102–26852 | 油封 | 1 | | | | | |
| 12 | 93306–301XD | 軸承 | 1 | | | | | |

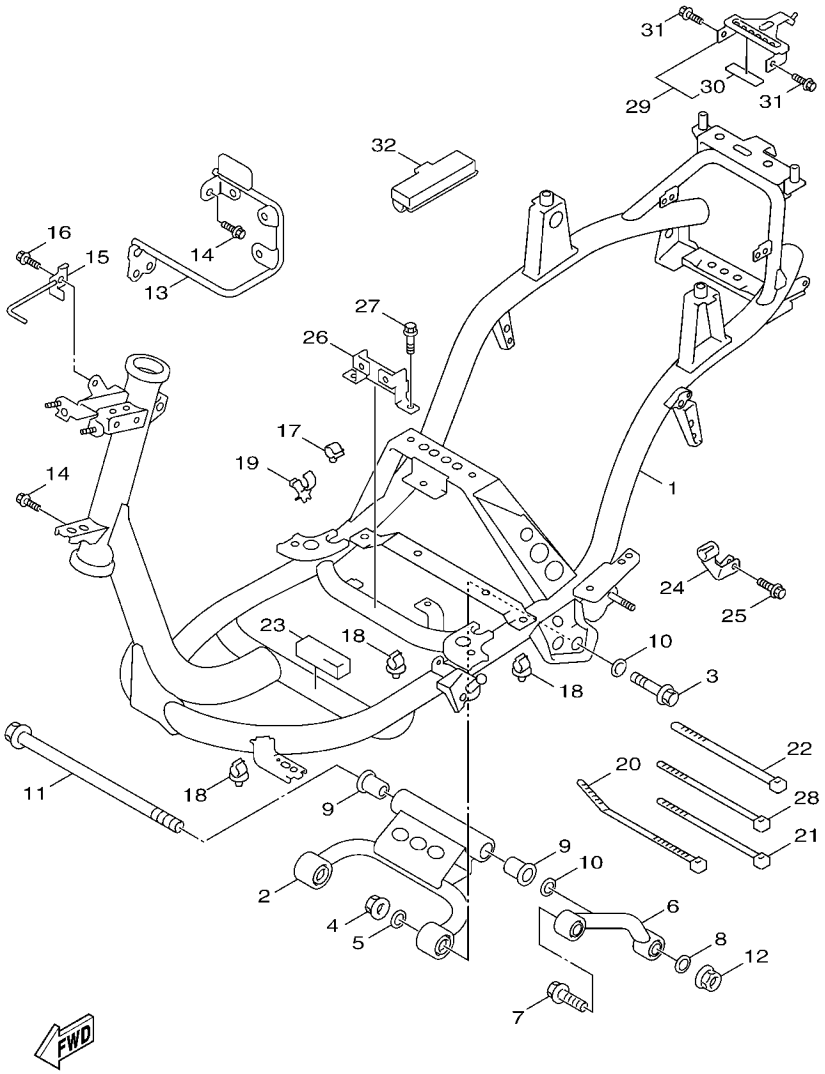


4C64414-G130

## FIG. 12 車架

| 項次 | 部品番號 | 部品名稱 | 4C64 | | | | | 備註 |
|---|---|---|---|---|---|---|---|---|
| 1 | 4C6–F1110–20–33 | 車架整體 | 1 | | | | | 山葉黑 |
| 2 | 4C6–F1420–10 | 引擎支架整體 | 1 | | | | | |
| 3 | 3UH–F1481–00 | 引擎裝置螺栓 | 2 | | | | | |
| 4 | 90185–10801 | 自鎖螺帽 | 2 | | | | | |
| 5 | 90201–105A2 | 平墊圈 | 2 | | | | | |
| 6 | 5ML–F1480–10 | 停止器 | 1 | | | | | |
| 7 | 95827–10045 | 凸緣螺栓 | 1 | | | | | |
| 8 | 90201–105A2 | 平墊圈 | 1 | | | | | |
| 9 | 5ML–F1544–01 | 軸環 | 2 | | | | | |
| 10 | 90202–15803 | 平墊圈 | 2 | | | | | |
| 11 | 5ML–F1481–00 | 引擎裝置螺栓 | 1 | | | | | |
| 12 | 90185–10801 | 自鎖螺帽 | 1 | | | | | |
| 13 | 4C6–F1415–00 | 支架 | 1 | | | | | |
| 14 | 95807–06010 | 凸緣螺栓 | 3 | | | | | |
| 15 | 5ML–F1161–01 | 鋼索導件 | 1 | | | | | |
| 16 | 95807–06010 | 凸緣螺栓 | 1 | | | | | |
| 17 | 90464–11801 | 夾 | 1 | | | | | |
| 18 | 90464–09801 | 夾 | 3 | | | | | |
| 19 | 90464–16803 | 夾 | 1 | | | | | |
| 20 | 90464–40801 | 夾 | 3 | | | | | |
| 21 | 90464–12812 | 夾 | 5 | | | | | |
| 22 | 90464–20809 | 夾 | 2 | | | | | |
| 23 | 5ML–F1208–00 | 封圈 | 1 | | | | | |
| 24 | 1P5–F1374–00 | 汽油管固定座 | 1 | | | | | |
| 25 | 95807–06010 | 凸緣螺栓 | 1 | | | | | |
| 26 | 1P5–F1359–01 | 線圈支架 | 1 | | | | | |
| 27 | 97027–05012 | 螺栓 | 2 | | | | | |

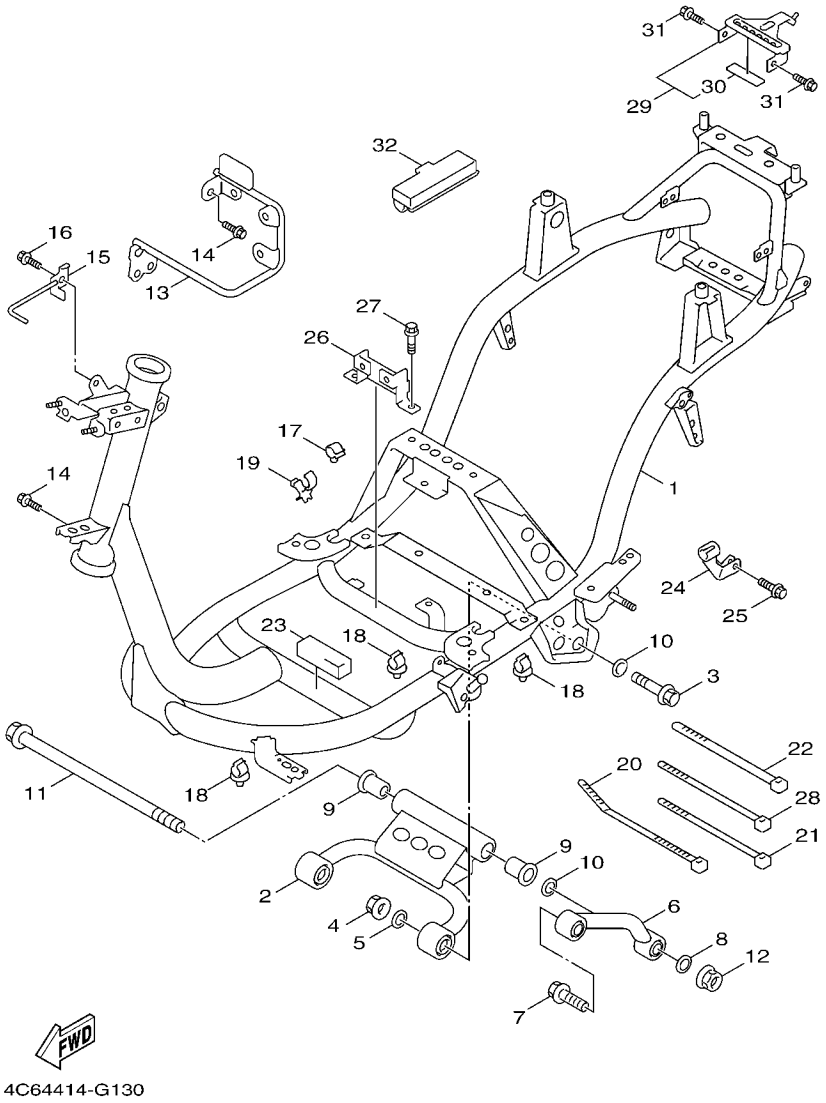


## FIG. 12 車架

| 項次 | 部品番號 | 部品名稱 | 4C64 | | | | | 備註 |
|---|---|---|---|---|---|---|---|---|
| 28 | 90464–26800 | 夾 | 2 | | | | | |
| 29 | 4C6–XF253–01 | 固定座 | 1 | | | | | |
| 30 | 1P3–F4747–01 | .防震墊 | 1 | | | | | |
| 31 | 95807–06014 | 凸緣螺栓 | 2 | | | | | |
| 32 | 5ML–F8100–00 | 工具包 | 1 | | | | | |

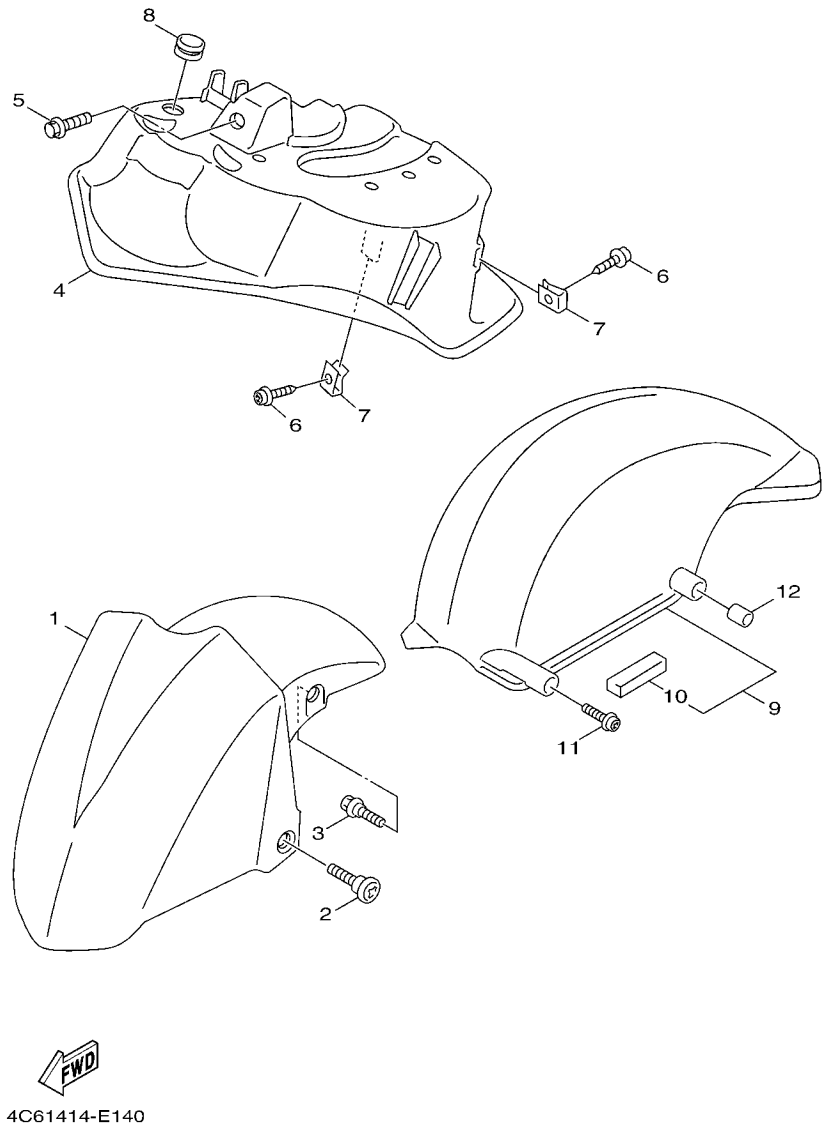


## FIG. 13 前擋泥蓋

| 項次 | 部品番號 | 部品名稱 | 4C64 | | | | | 備註 |
|---|---|---|---|---|---|---|---|---|
| 1 | 4C6–F1511–00–P0 | 前擋泥蓋 | 1 | | | | | 用於黑銀 |
| | 4C6–F1511–00–GE | 前擋泥蓋 | 1 | | | | | 用於白銀 |
| | 4C6–F1511–00–PA | 前擋泥蓋 | 1 | | | | | 用於深藍銀 |
| | 4C6–F1511–00–PB | 前擋泥蓋 | 1 | | | | | 用於黃銀 |
| 2 | 90154–06807 | 螺絲 | 2 | | | | | |
| 3 | 90109–06876 | 螺栓 | 2 | | | | | |
| 4 | 4C6–F1552–00 | 下前檔泥蓋 | 1 | | | | | |
| 5 | 90119–06821 | 六角套頭螺栓 | 1 | | | | | |
| 6 | 97707–50016 | 攻螺絲 | 2 | | | | | |
| 7 | 90183–05807 | 彈簧螺帽 | 2 | | | | | |
| 8 | 5ML–F2417–00 | 塞 | 1 | | | | | |
| 9 | 5ML–XF161–01 | 後擋泥蓋整體 | 1 | | | | | |
| 10 | 5CA–F1639–00 | .防震墊 | 1 | | | | | |
| 11 | 95807–06016 | 凸緣螺栓 | 3 | | | | | |
| 12 | 90387–06868 | 軸環 | 3 | | | | | |

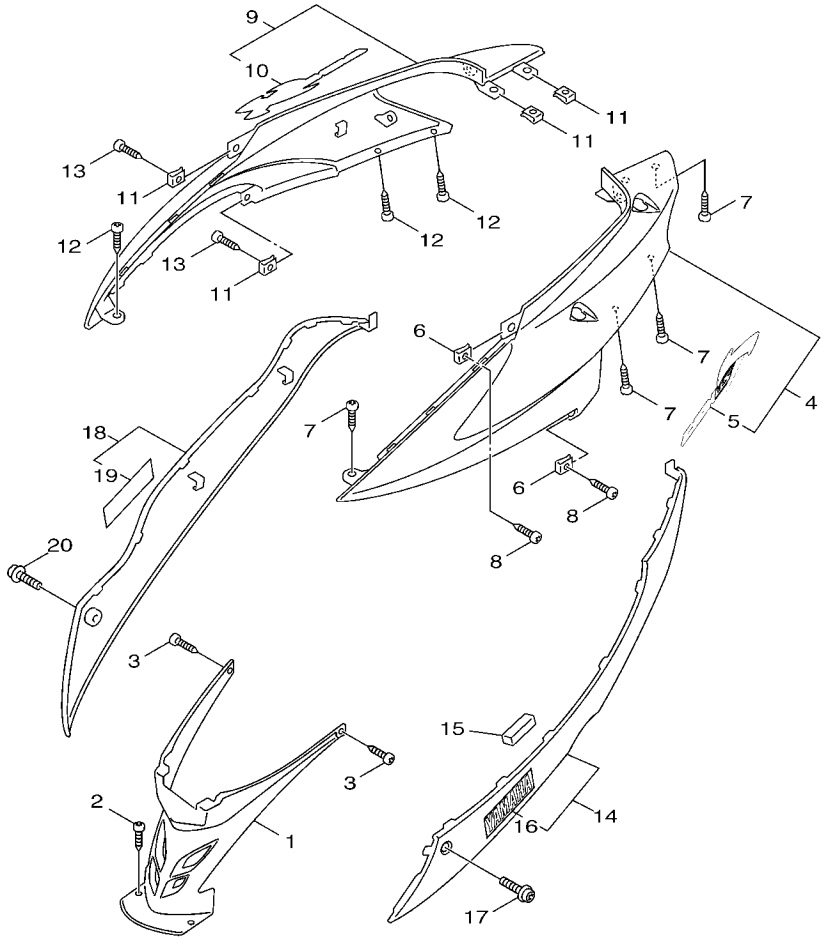


4C64414-G140

## FIG. 14 側蓋

| 項次 | 部品番號 | 部品名稱 | 4C64 | | | | | 備註 |
|---|---|---|---|---|---|---|---|---|
| 1 | 4C6–F1711–00 | 側蓋 1 | 1 | | | | | |
| 2 | 97707–50012 | 攻螺絲 | 2 | | | | | |
| 3 | 97707–50012 | 攻螺絲 | 2 | | | | | |
| 4 | 4C6–XF172–00–5X | 側蓋 2 | 1 | | | | | 用於黑銀 |
| | 4C6–XF172–00–9X | 側蓋 2 | 1 | | | | | 用於白銀 |
| | 4C6–XF172–00–0Y | 側蓋 2 | 1 | | | | | 用於深藍銀 |
| | 4C6–XF172–00–8X | 側蓋 2 | 1 | | | | | 用於黃銀 |
| 5 | 4C6–F1785–30 | .標誌 | 1 | | | | | |
| 6 | 90183–05807 | 彈簧螺帽 | 2 | | | | | |
| 7 | 97707–50012 | 攻螺絲 | 5 | | | | | |
| 8 | 97707–50016 | 攻螺絲 | 2 | | | | | |
| 9 | 4C6–XF173–00–5X | 側蓋 3 | 1 | | | | | 用於黑銀 |
| | 4C6–XF173–00–9X | 側蓋 3 | 1 | | | | | 用於白銀 |
| | 4C6–XF173–00–0Y | 側蓋 3 | 1 | | | | | 用於深藍銀 |
| | 4C6–XF173–00–8X | 側蓋 3 | 1 | | | | | 用於黃銀 |
| 10 | 4C6–F1786–30 | .標誌 | 1 | | | | | |
| 11 | 90183–05807 | 彈簧螺帽 | 4 | | | | | |
| 12 | 97707–50012 | 攻螺絲 | 3 | | | | | |
| 13 | 97707–50016 | 攻螺絲 | 2 | | | | | |
| 14 | 4C6–X7482–10–P0 | 護片 1 | 1 | | | | | 用於黑銀 |
| | 4C6–X7482–00–GE | 護片 1 | 1 | | | | | 用於白銀 |
| | 4C6–X7482–00–PA | 護片 1 | 1 | | | | | 用於深藍銀 |
| | 4C6–X7482–00–PB | 護片 1 | 1 | | | | | 用於黃銀 |
| 15 | 5FA–F1717–00 | 防震墊 | 1 | | | | | |
| 16 | 4C6–F747A–00 | .圖案 | 1 | | | | | 用於白銀 |
| | 4C6–F747A–30 | .圖案 | 1 | | | | | 用於 SMX... |
| 17 | 90159–05831 | 螺絲附墊圈 | 1 | | | | | |

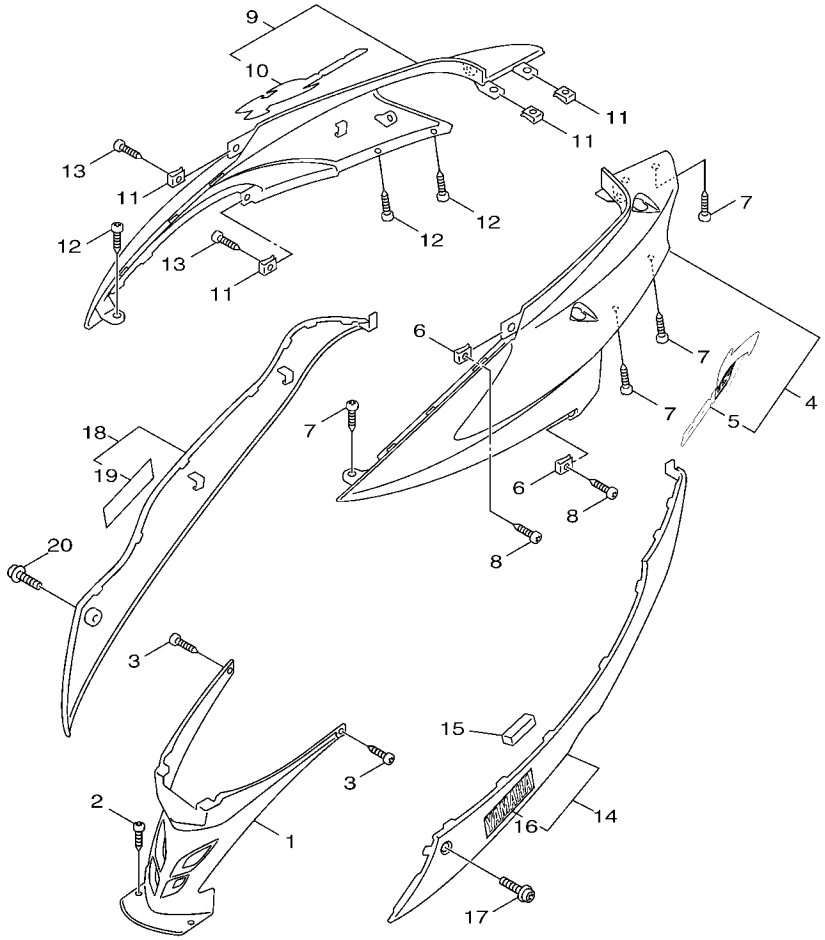


4C64414-G140

## FIG. 14 側蓋

| 項次 | 部品番號 | 部品名稱 | 4C64 | | | | | 備註 |
|---|---|---|---|---|---|---|---|---|
| 18 | 4C6–X7492–10–P0 | 護片 2 | 1 | | | | | 用於黑銀 |
| | 4C6–X7492–00–GE | 護片 2 | 1 | | | | | 用於白銀 |
| | 4C6–X7492–00–PA | 護片 2 | 1 | | | | | 用於深藍銀 |
| | 4C6–X7492–00–PB | 護片 2 | 1 | | | | | 用於黃銀 |
| 19 | 4C6–F747A–00 | .圖案 | 1 | | | | | 用於白銀 |
| | 4C6–F747A–30 | .圖案 | 1 | | | | | 用於 SMX... |
| 20 | 90159–05831 | 螺絲附墊圈 | 1 | | | | | |

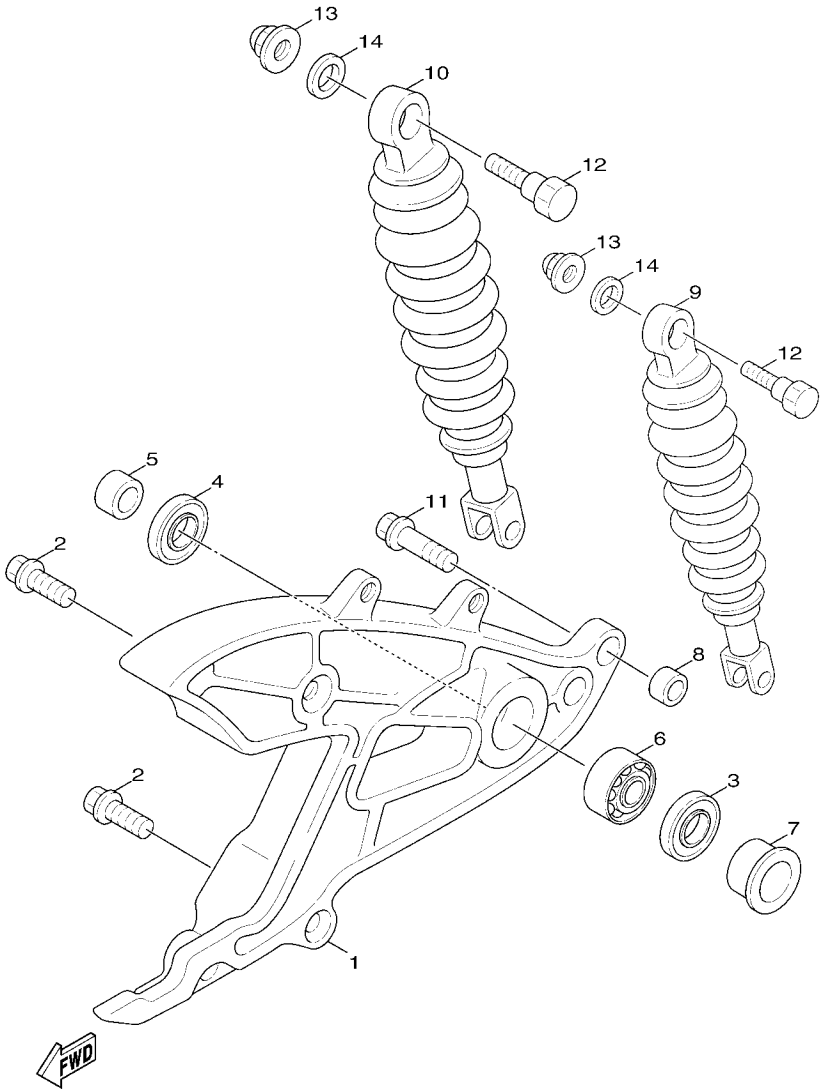


5TY1414-2161

## FIG. 15 後臂,懸吊系統

| 項次 | 部品番號 | 部品名稱 | 4C64 | | | | | 備註 |
|---|---|---|---|---|---|---|---|---|
| 1 | 5ML–F2171–01 | 後臂 | 1 | | | | | |
| 2 | 95827–08040 | 凸緣螺栓 | 2 | | | | | |
| 3 | 93109–28811 | 油封 | 1 | | | | | |
| 4 | 93106–26823 | 油封 | 1 | | | | | |
| 5 | 90387–15423 | 軸環 | 1 | | | | | |
| 6 | 93306–302X1 | 軸承 | 1 | | | | | |
| 7 | 90387–153N8 | 軸環 | 1 | | | | | |
| 8 | 4X6–F2216–00 | 後緩衝器襯套 | 1 | | | | | |
| 9 | 4C6–F2210–20 | 後緩衝器總成 | 1 | | | | | |
| 10 | 4C6–F2220–20 | 後緩衝器 | 1 | | | | | |
| 11 | 90105–08121 | 墊圈座帽螺栓 | 2 | | | | | |
| 12 | 90101–10875 | 六角螺栓 | 2 | | | | | |
| 13 | 95307–10800 | 六角螺帽 | 2 | | | | | |
| 14 | 90201–101J1 | 平墊圈 | 2 | | | | | |

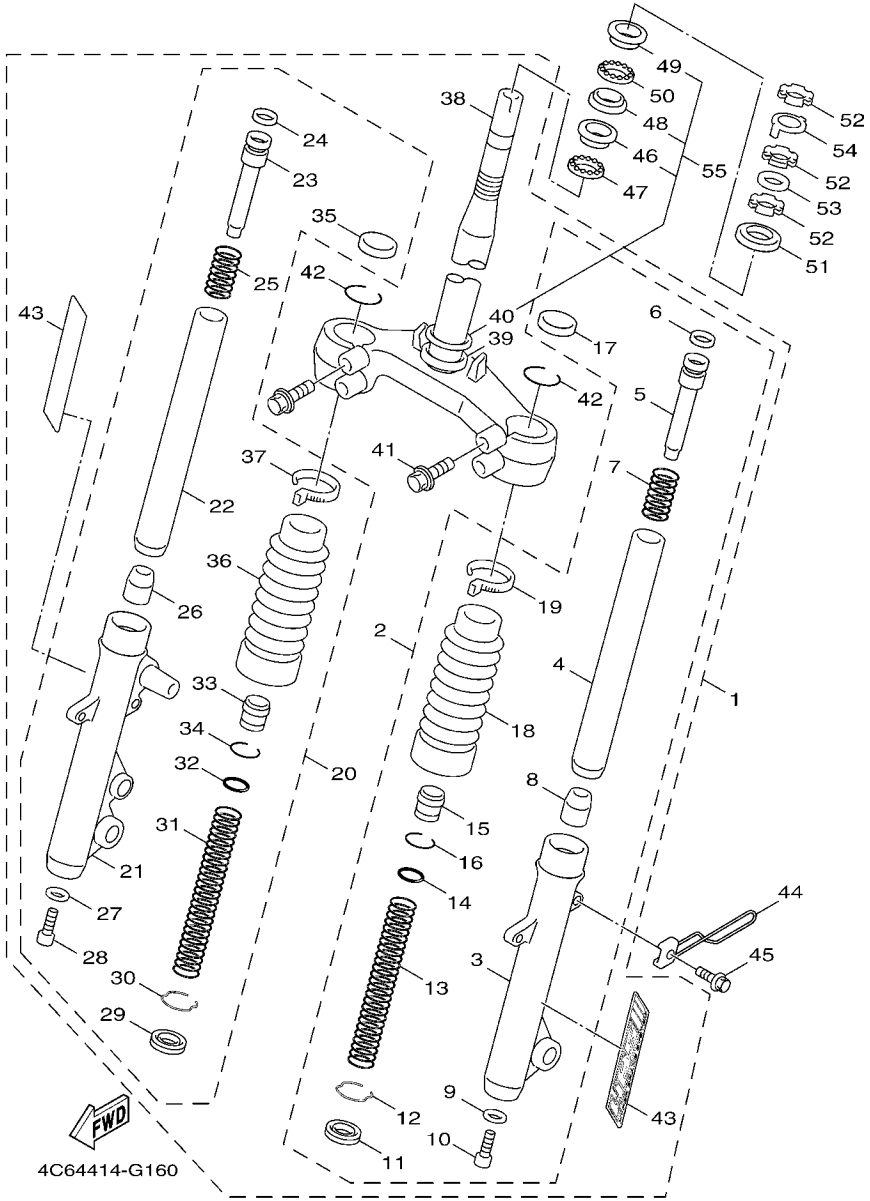


## FIG. 16 前叉

| 項次 | 部品番號 | 部品名稱 | 4C64 | | | | | 備註 |
|---|---|---|---|---|---|---|---|---|
| 1 | 4C6–WF310–30 | 前叉總成 | 1 | | | | | |
| 2 | 4C6–F3102–20 | .左前叉內外管組 | 1 | | | | | |
| 3 | 4C6–F3126–20 | ..左外管 | 1 | | | | | |
| 4 | 4C6–F3110–00 | ..前叉內管 | 1 | | | | | |
| 5 | 4C6–F3142–00 | ..上彈簧座 | 1 | | | | | |
| 6 | 4C6–F318X–00 | ..活塞環 | 1 | | | | | |
| 7 | 4C6–F3151–00 | ..彈簧 | 1 | | | | | |
| 8 | 4C6–F3171–00 | ..前叉接筒整體 | 1 | | | | | |
| 9 | 4C6–F3158–00 | ..墊片 | 1 | | | | | |
| 10 | 4C6–F3181–00 | ..螺栓 | 1 | | | | | |
| 11 | 4C6–F3145–00 | ..油封 | 1 | | | | | |
| 12 | 4C6–F3157–00 | ..前叉活塞環 | 1 | | | | | |
| 13 | 4C6–F3141–00 | ..前叉彈簧 | 1 | | | | | |
| 14 | 4C6–F3147–00 | ..護油圈 | 1 | | | | | |
| 15 | 4C6–F3113–00 | ..軸環 | 1 | | | | | |
| 16 | 4C6–F3155–00 | ..環 | 1 | | | | | |
| 17 | 4C6–F3154–00 | ..內管塞 | 1 | | | | | |
| 18 | 4C6–F3191–00 | ..保護罩 | 1 | | | | | |
| 19 | 4C6–F3192–00 | ..保護罩帶 | 1 | | | | | |
| 20 | 4C6–F3103–20 | .右前叉內外管組 | 1 | | | | | |
| 21 | 4C6–F3136–20 | ..右外管 | 1 | | | | | |
| 22 | 4C6–F3110–00 | ..前叉內管 | 1 | | | | | |
| 23 | 4C6–F3142–00 | ..上彈簧座 | 1 | | | | | |
| 24 | 4C6–F318X–00 | ..活塞環 | 1 | | | | | |
| 25 | 4C6–F3151–00 | ..彈簧 | 1 | | | | | |
| 26 | 4C6–F3171–00 | ..前叉接筒整體 | 1 | | | | | |
| 27 | 4C6–F3158–00 | ..墊片 | 1 | | | | | |

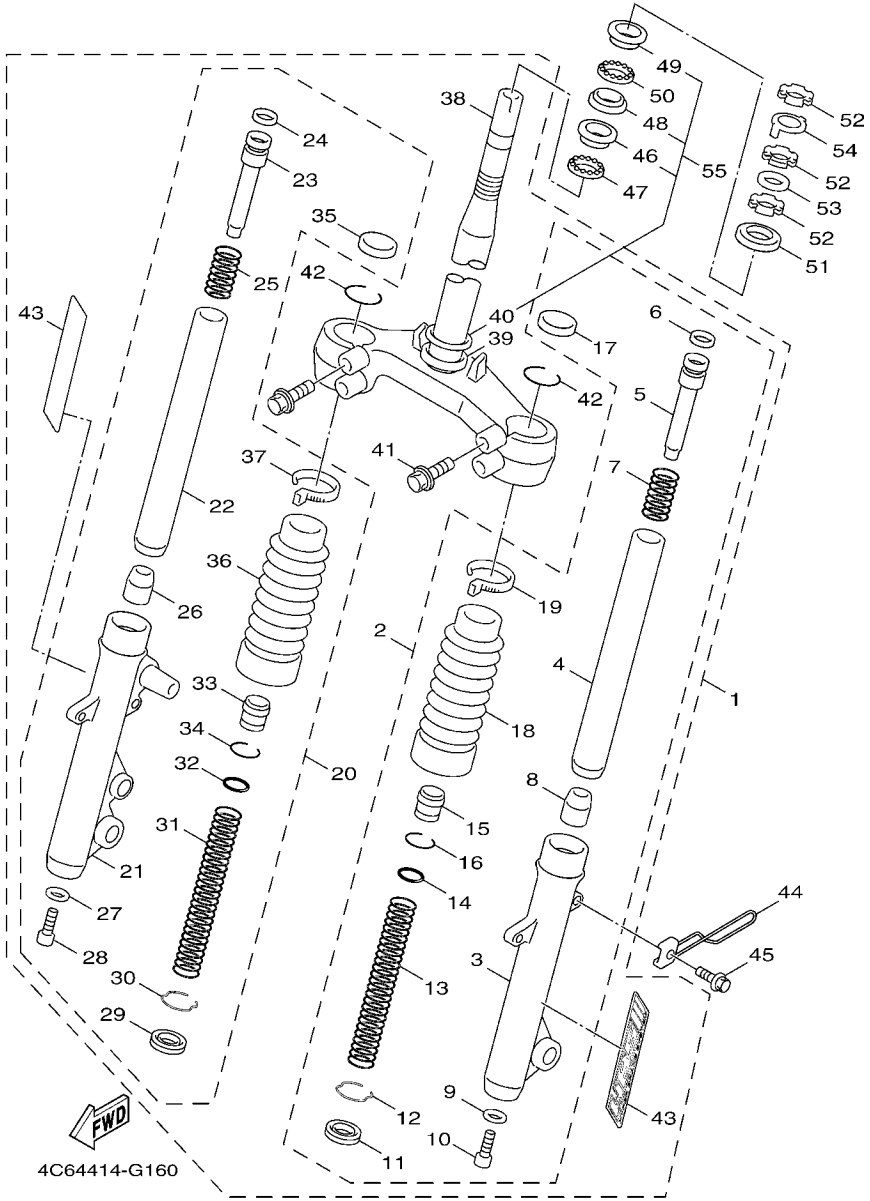


## FIG. 16 前叉

| 項次 | 部品番號 | 部品名稱 | 4C64 | | | | | 備註 |
|---|---|---|---|---|---|---|---|---|
| 28 | 4C6–F3181–00 | ..螺栓 | 1 | | | | | |
| 29 | 4C6–F3145–00 | ..油封 | 1 | | | | | |
| 30 | 4C6–F3157–00 | ..前叉活塞環 | 1 | | | | | |
| 31 | 4C6–F3141–00 | ..前叉彈簧 | 1 | | | | | |
| 32 | 4C6–F3147–00 | ..護油圈 | 1 | | | | | |
| 33 | 4C6–F3113–00 | ..軸環 | 1 | | | | | |
| 34 | 4C6–F3155–00 | ..環 | 1 | | | | | |
| 35 | 4C6–F3154–00 | ..內管塞 | 1 | | | | | |
| 36 | 4C6–F3191–00 | ..保護罩 | 1 | | | | | |
| 37 | 4C6–F3192–00 | ..保護罩帶 | 1 | | | | | |
| 38 | 4C6–F3340–00 | .下三角架 | 1 | | | | | |
| 39 | 3KW–F3462–00 | .操縱舵封圈 | 1 | | | | | |
| 40 | 4C6–F3411–10 | .珠碗 1 | 1 | | | | | |
| 41 | 4C6–F3346–00 | .螺栓 | 4 | | | | | |
| 42 | 4C6–F3153–00 | .環 | 2 | | | | | |
| 43 | 4C6–F3108–00 | .標誌 | 2 | | | | | |
| 44 | 5ML–F3317–00 | 鋼索座 | 1 | | | | | |
| 45 | 9580L–06010 | 凸緣螺栓 | 1 | | | | | |
| 46 | 4C6–F3412–00 | 珠碗 2 | 1 | | | | | |
| 47 | 4C6–F341E–00 | 滾珠軸承 | 1 | | | | | |
| 48 | 4C6–F3414–00 | 珠碗 4 | 1 | | | | | |
| 49 | 4C6–F3413–00 | 珠碗 3 | 1 | | | | | |
| 50 | 4C6–F341D–00 | 滾珠軸承 2 | 1 | | | | | |
| 51 | 4C6–F3416–00 | 珠碗蓋 | 1 | | | | | |
| 52 | 90179–25615 | 螺帽 | 3 | | | | | |
| 53 | 90202–26142 | 平墊圈 | 1 | | | | | |
| 54 | 4VP–F3418–00 | 特殊墊圈 | 1 | | | | | |

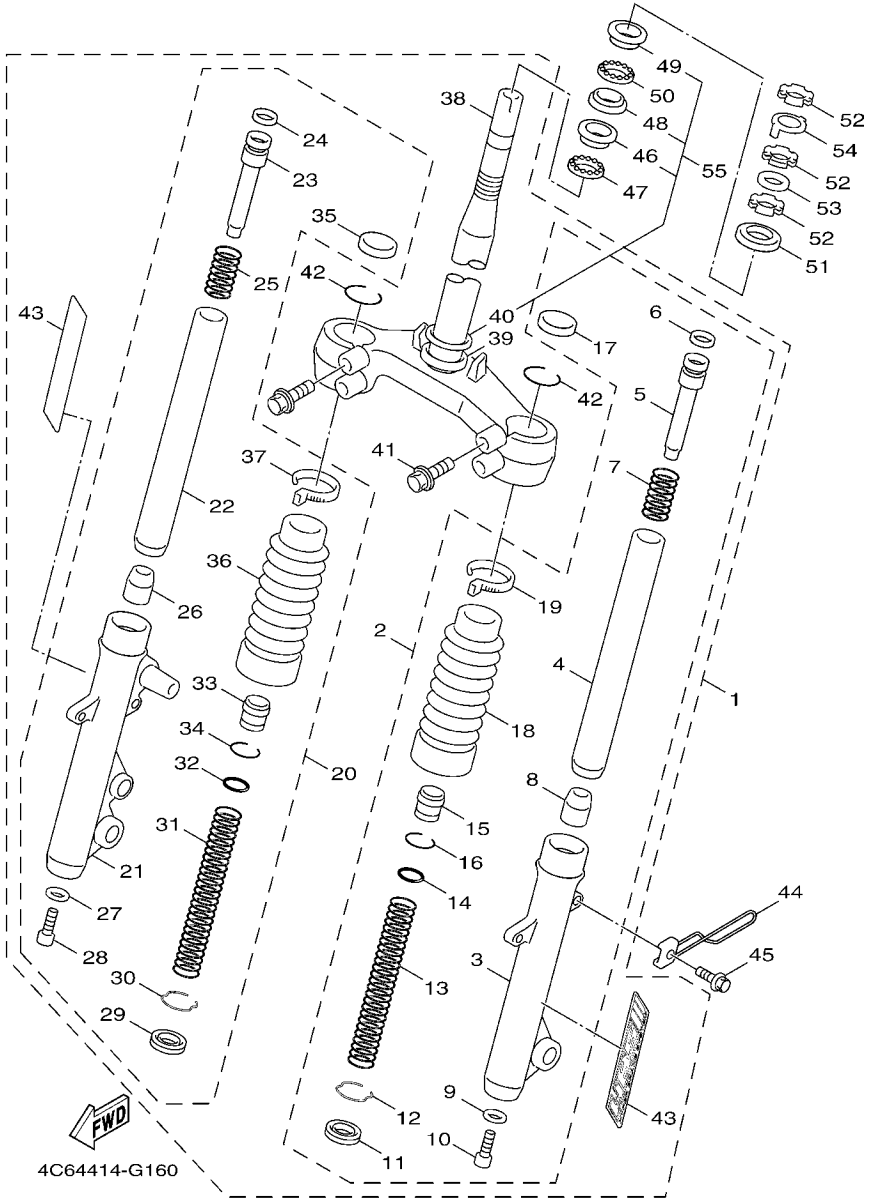


## FIG. 16 前叉

| 項次 | 部品番號 | 部品名稱 | 4C64 | | | | | 備註 |
|---|---|---|---|---|---|---|---|---|
| 55 | 4C6–W0054–10 | 珠碗組 | 1 | | | | | |

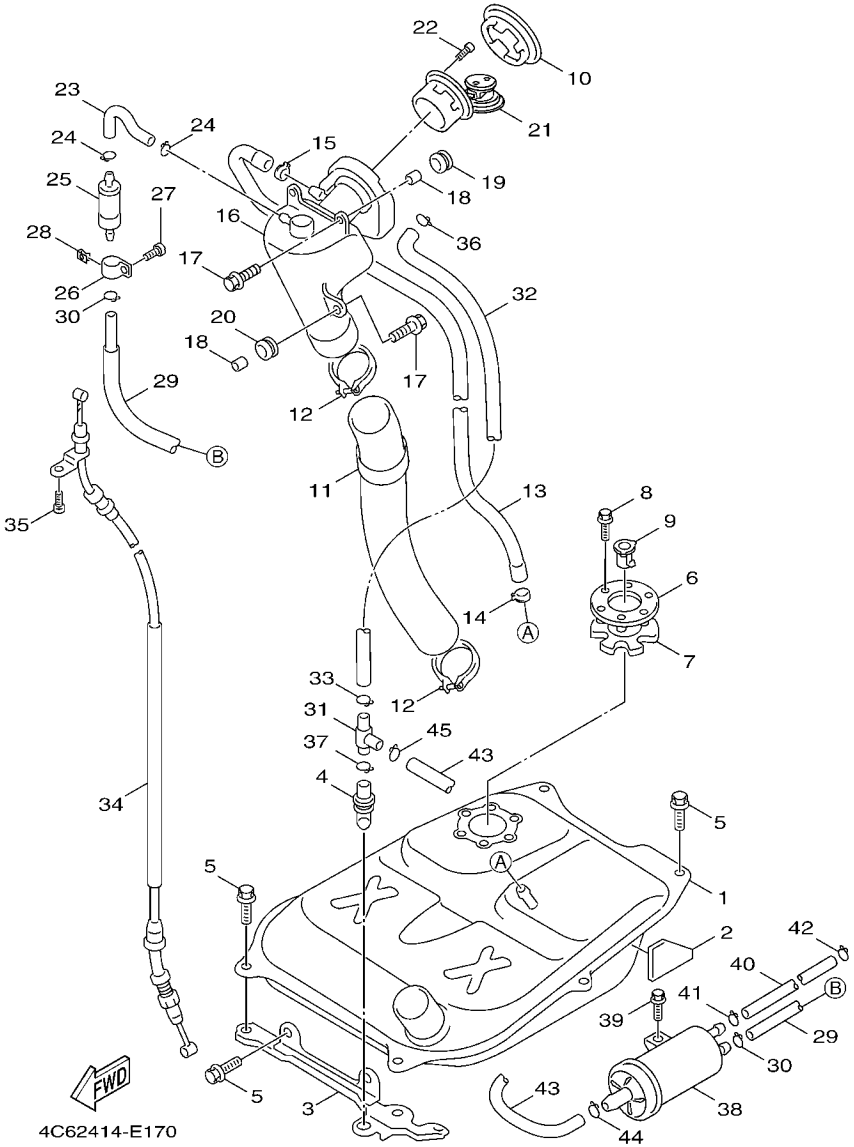


## FIG. 17 汽油箱

| 項次 | 部品番號 | 部品名稱 | 4C64 | | | | | 備註 |
|---|---|---|---|---|---|---|---|---|
| 1 | 4C6–F4110–10–33 | 汽油箱總成 | 1 | | | | | 山葉黑 |
| 2 | 5ML–F4183–00 | 定位防震墊 3 | 1 | | | | | |
| 3 | 5ML–F4115–00 | 固定座 | 1 | | | | | |
| 4 | 5ML–F4339–00 | 索環 | 1 | | | | | |
| 5 | 90119–06875 | 六角套頭螺栓 | 6 | | | | | |
| 6 | 3D0–F4491–00 | 支架 | 1 | | | | | |
| 7 | 5CA–2414G–01 | 封圈 | 1 | | | | | |
| 8 | 97507–05520 | 六角螺栓附墊圈 | 6 | | | | | |
| 9 | 5VU–24135–00 | 止夾 | 1 | | | | | |
| 10 | 1P3–F467E–00 | 蓋 | 1 | | | | | |
| 11 | 5ML–F4316–10 | 管 | 1 | | | | | |
| 12 | 90450–60001 | 軟管夾 | 2 | | | | | |
| 13 | 4C6–F4317–00 | 油管 | 1 | | | | | |
| 14 | 90468–08812 | 止夾 | 1 | | | | | |
| 15 | 90467–20810 | 止夾 | 1 | | | | | |
| 16 | 4C6–F4280–00 | 油箱 | 1 | | | | | |
| 17 | 90119–06864 | 六角套頭螺栓 | 3 | | | | | |
| 18 | 90387–07598 | 軸環 | 3 | | | | | |
| 19 | 90480–18290 | 索環 | 2 | | | | | |
| 20 | 90480–01326 | 索環 | 1 | | | | | |
| 21 | 1P3–F4610–00 | 汽油箱蓋總成 | 1 | | | | | |
| 22 | 90155–04800 | 十字平凹口螺絲 | 3 | | | | | |
| 23 | 5ML–F4313–00 | 汽油管 | 1 | | | | | |
| 24 | 90467–08003 | 止夾 | 2 | | | | | |
| 25 | 5ML–F4180–00 | 控制閥總成 | 1 | | | | | |
| 26 | 90461–15801 | 夾環 | 1 | | | | | |
| 27 | 97707–50014 | 攻螺絲 | 1 | | | | | |

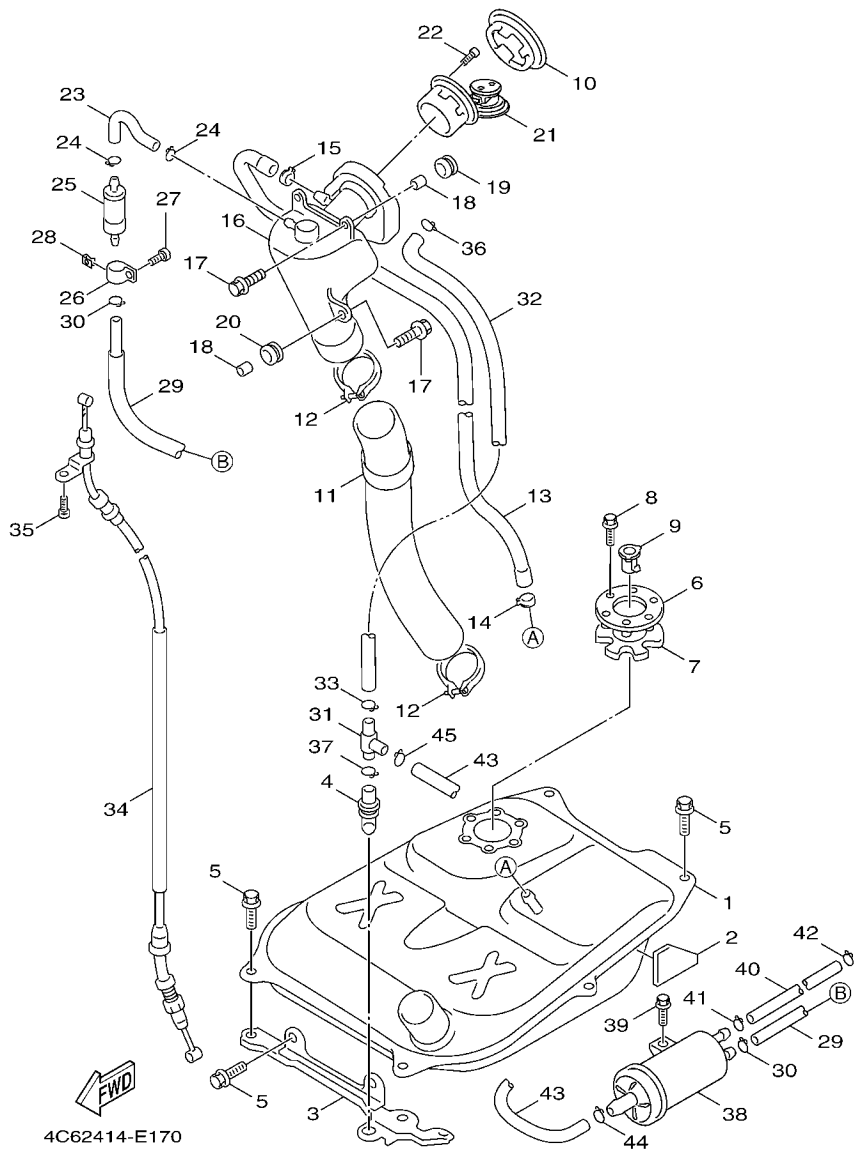


## FIG. 17 汽油箱

| 項次 | 部品番號 | 部品名稱 | 4C64 | | | | | 備註 |
|---|---|---|---|---|---|---|---|---|
| 28 | 90183–05807 | 彈簧螺帽 | 1 | | | | | |
| 29 | 5TY–F4314–00 | 油管 | 1 | | | | | |
| 30 | 90467–09006 | 止夾 | 2 | | | | | |
| 31 | 3UH–F4376–00 | 連接管 | 1 | | | | | |
| 32 | 4C6–F4318–00 | 管 | 1 | | | | | |
| 33 | 90467–10041 | 止夾 | 1 | | | | | |
| 34 | 4C6–F4494–00 | 鋼索 | 1 | | | | | |
| 35 | 90119–05071 | 六角套頭螺栓 | 1 | | | | | |
| 36 | 90467–12052 | 止夾 | 1 | | | | | |
| 37 | 90467–10041 | 止夾 | 1 | | | | | |
| 38 | 5TY–F4170–00 | 活性碳罐 | 1 | | | | | |
| 39 | 90109–063F1 | 螺栓 | 1 | | | | | |
| 40 | 4C6–F4322–00 | 管 | 1 | | | | | |
| 41 | 90467–08075 | 止夾 | 1 | | | | | |
| 42 | 90467–09006 | 止夾 | 1 | | | | | |
| 43 | 5TY–F4315–00 | 油管 | 1 | | | | | |
| 44 | 90467–11106 | 止夾 | 1 | | | | | |
| 45 | 90467–10041 | 止夾 | 1 | | | | | |

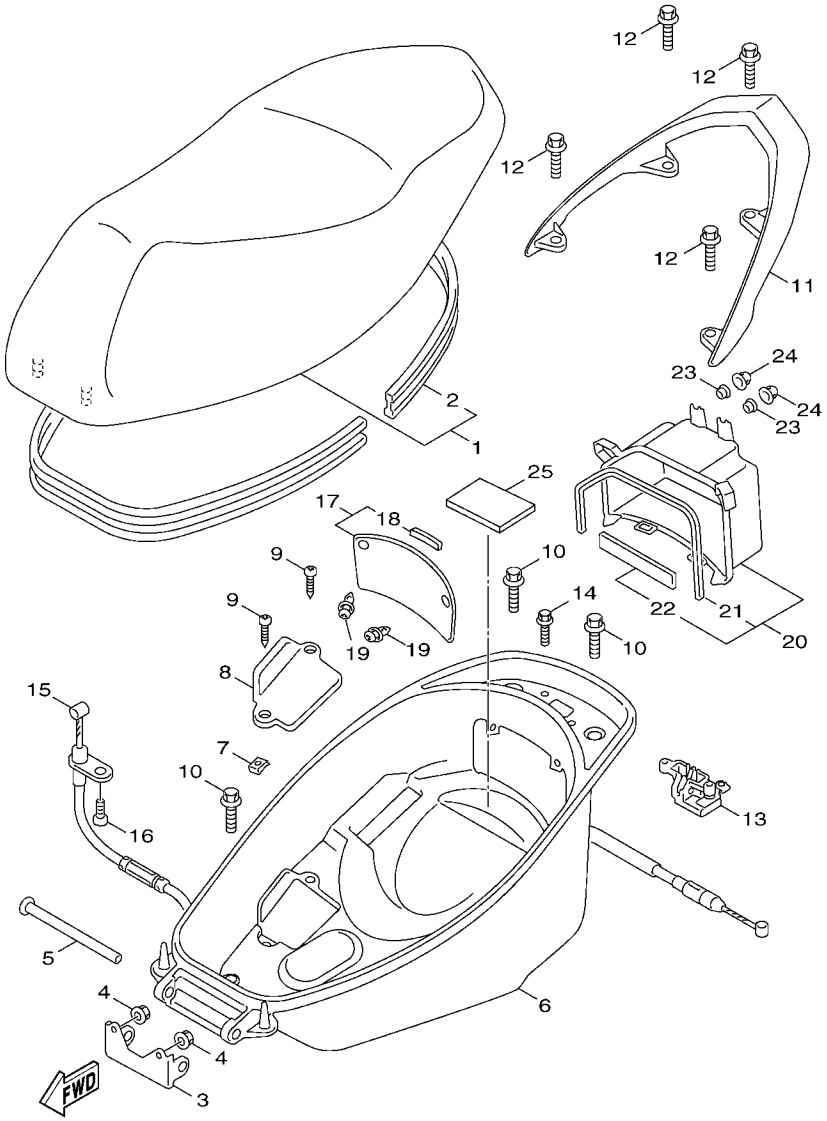


4C61414-E191

## FIG. 18 座墊

| 項次 | 部品番號 | 部品名稱 | 4C64 | | | | | 備註 |
|---|---|---|---|---|---|---|---|---|
| 1 | 4C6–F4730–10 | 雙人座墊 | 1 | | | | | |
| 2 | 4C6–F475M–00 | .封圈 | 1 | | | | | |
| 3 | 4CW–F4726–01 | 座墊活葉 | 1 | | | | | |
| 4 | 95707–06500 | 凸緣螺帽 | 2 | | | | | |
| 5 | 90241–10015 | 銷 | 1 | | | | | |
| 6 | 4C6–F473R–00 | 置物箱 | 1 | | | | | |
| 7 | 90183–05807 | 彈簧螺帽 | 2 | | | | | |
| 8 | 5ML–F473T–00 | 箱蓋 | 1 | | | | | |
| 9 | 97707–50012 | 攻螺絲 | 2 | | | | | |
| 10 | 90109–063F1 | 螺栓 | 4 | | | | | |
| 11 | 4C6–F4812–00–P0 | 把手 | 1 | | | | | 用於黑銀 |
| | 4C6–F4812–00–GE | 把手 | 1 | | | | | 用於白銀 |
| | 4C6–F4812–00–PA | 把手 | 1 | | | | | 用於深藍銀 |
| | 4C6–F4812–00–PB | 把手 | 1 | | | | | 用於黃銀 |
| 12 | 90105–08813 | 墊圈座帽螺栓 | 4 | | | | | |
| 13 | 4UE–F4780–02 | 座墊鎖總成 | 1 | | | | | |
| 14 | 95807–06016 | 凸緣螺栓 | 2 | | | | | |
| 15 | 1P3–F478E–00 | 座墊鎖線 | 1 | | | | | |
| 16 | 90119–05071 | 六角套頭螺栓 | 1 | | | | | |
| 17 | 4C6–XH219–00 | 蓄電池蓋 | 1 | | | | | |
| 18 | 4C6–F4723–00 | .防震墊 | 1 | | | | | |
| 19 | 90269–06806 | 鉚釘 | 2 | | | | | |
| 20 | 4C6–XH212–00 | 蓄電池盒 | 1 | | | | | |
| 21 | 4C6–F4737–00 | .防震墊 | 1 | | | | | |
| 22 | 4C6–H2121–00 | .蓄電池襯墊 | 1 | | | | | |
| 23 | 90387–06868 | 軸環 | 2 | | | | | |
| 24 | 90176–06065 | 有蓋螺帽 | 2 | | | | | |

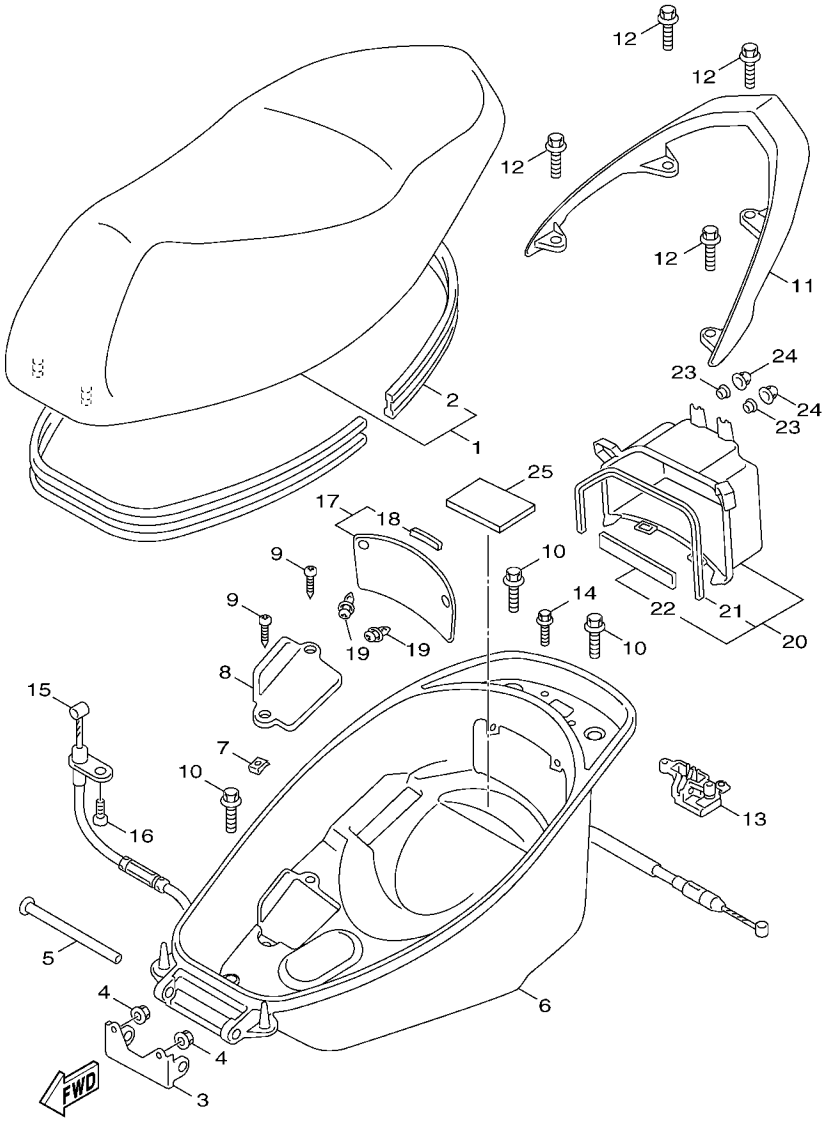


## FIG. 18 座墊

| 項次 | 部品番號 | 部品名稱 | 4C64 | | | | | 備註 |
|---|---|---|---|---|---|---|---|---|
| 25 | 5ML–F139X–00 | 防震墊 | 1 | | | | | |

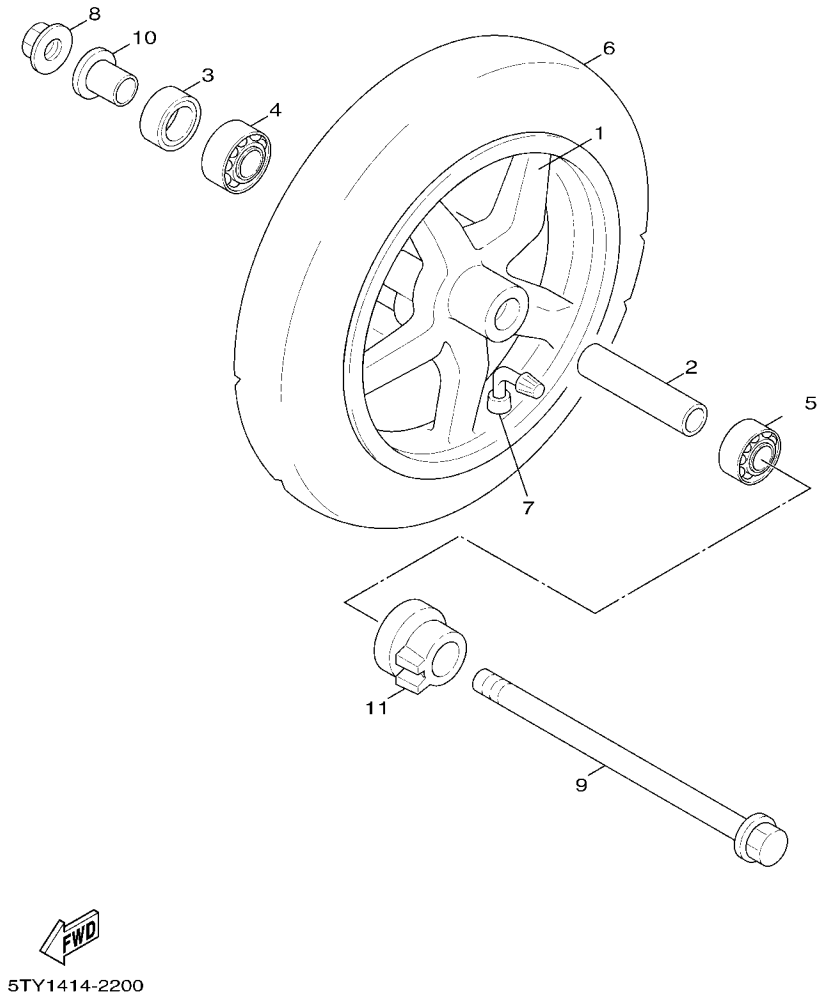


## FIG. 19 前輪

| 項次 | 部品番號 | 部品名稱 | 4C64 | | | | | 備註 |
|---|---|---|---|---|---|---|---|---|
| 1 | 5ML–F5168–00–33 | 前鑄輪 | 1 | | | | | 山葉黑 |
| 2 | 5ML–F5183–00 | 輪軸軸環 | 1 | | | | | |
| 3 | 93102–17853 | 油封 | 1 | | | | | |
| 4 | 93306–201Y7 | 軸承 | 1 | | | | | |
| 5 | 93306–301YA | 軸承 | 1 | | | | | |
| 6 | 94111–12803 | 輪胎 | 1 | | | | | |
| 7 | 93900–00805 | 氣門嘴 | 1 | | | | | |
| 8 | 95607–12200 | U型螺帽 | 1 | | | | | |
| 9 | 5ML–F5181–00 | 前輪軸 | 1 | | | | | |
| 10 | 90387–125J1 | 軸環 | 1 | | | | | |
| 11 | 4C6–F5190–00 | 齒輪組件總成 | 1 | | | | | |

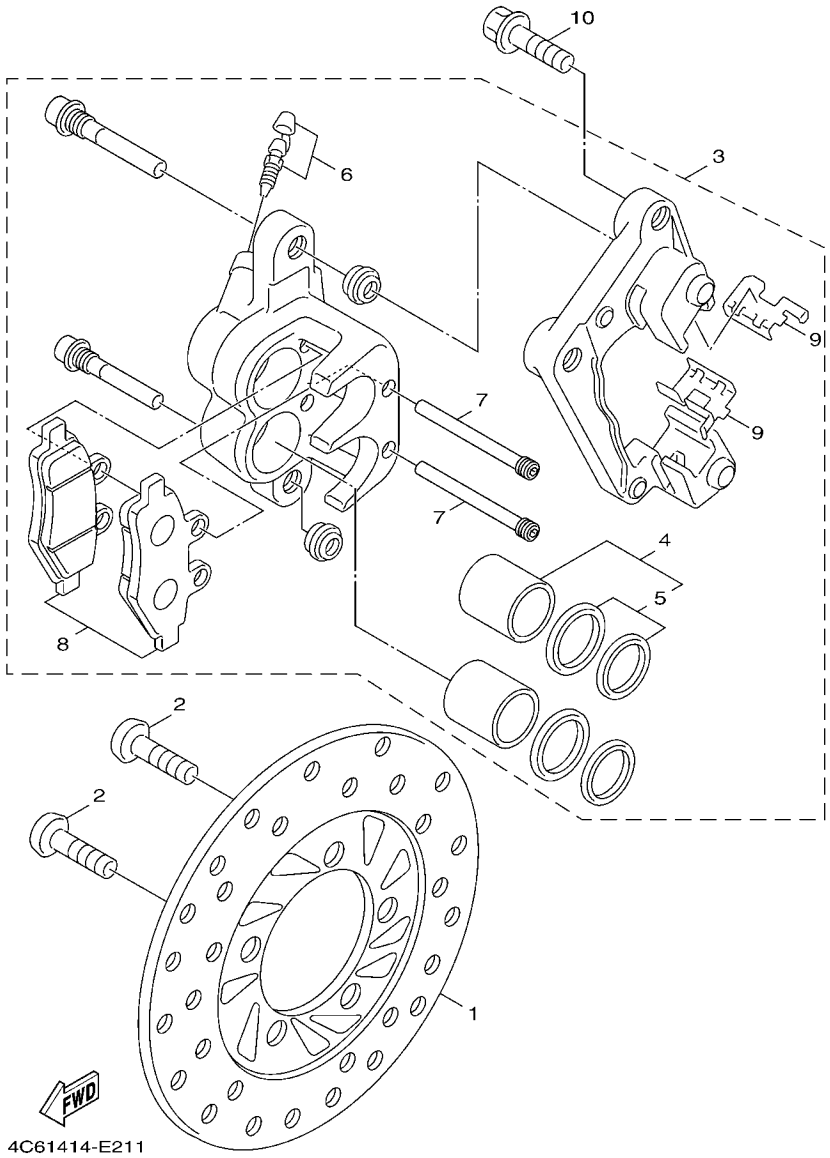


## FIG. 20 前剎車卡鉗

| 項次 | 部品番號 | 部品名稱 | 4C64 | | | | | 備註 |
|---|---|---|---|---|---|---|---|---|
| 1 | 4C6–F582U–10 | 剎車圓盤 | 1 | | | | | |
| 2 | 90149–08814 | 螺絲 | 5 | | | | | |
| 3 | 4C6–F580U–10 | 卡鉗總成 | 1 | | | | | |
| 4 | 5NW–W0057–00 | .卡鉗活塞 | 1 | | | | | |
| 5 | 5NW–W0047–00 | ..卡鉗封圈組 | 1 | | | | | |
| 6 | 5AG–W0048–00 | .螺栓桿組 | 1 | | | | | |
| 7 | 4C6–F5924–00 | .銷 | 2 | | | | | |
| 8 | 4C6–W0045–00 | .前剎車片組 | 1 | | | | | |
| 9 | 4C6–F5919–00 | .緩衝器支座 | 2 | | | | | |
| 10 | 90105–10638 | 墊圈座帽螺栓 | 2 | | | | | |

## FIG. 21 後輪

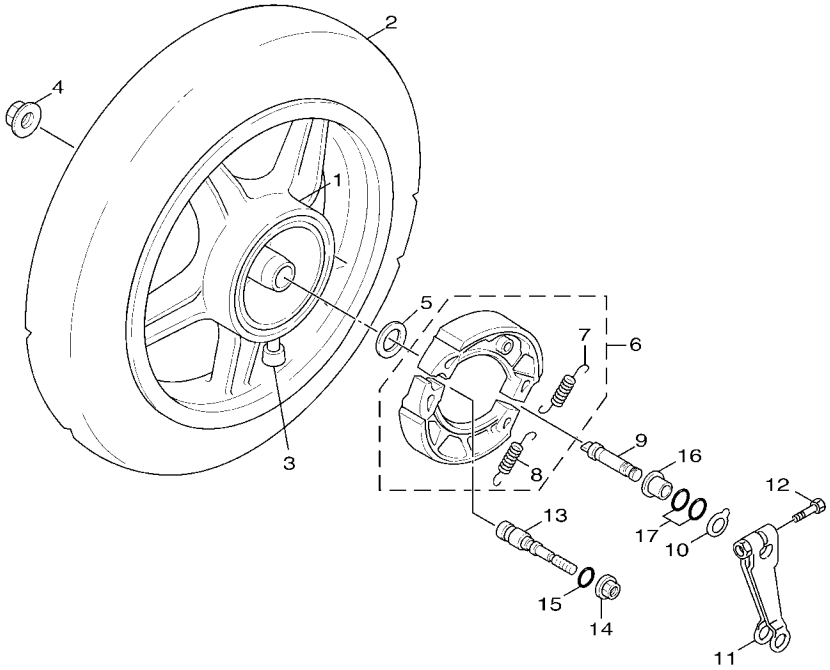

5TY1414-2223

| 項次 | 部品番號 | 部品名稱 | 4C64 | | | | | 備註 |
|---|---|---|---|---|---|---|---|---|
| 1 | 5ML–F5338–00–33 | 後鑄輪 | 1 | | | | | 山葉黑 |
| 2 | 94112–12804 | 輪胎 | 1 | | | | | |
| 3 | 93900–00805 | 氣門嘴 | 1 | | | | | |
| 4 | 90185–14124 | 自鎖螺帽 | 1 | | | | | |
| 5 | 90201–20276 | 平墊圈 | 1 | | | | | |
| 6 | 5ML–XF533–00 | 剎車塊組 | 1 | | | | | |
| 7 | 90506–13800 | .拉力彈簧 | 1 | | | | | |
| 8 | 90506–16802 | .拉力彈簧 | 1 | | | | | |
| 9 | 5ML–F5351–00 | 凸輪軸 | 1 | | | | | |
| 10 | 4VP–F533A–00 | 指示板 | 1 | | | | | |
| 11 | 5S9–F5355–00 | 凸輪軸臂桿 | 1 | | | | | |
| 12 | 90101–06278 | 六角螺栓 | 1 | | | | | |
| 13 | 5ML–F5326–00 | 叉銷 | 1 | | | | | |
| 14 | 95707–10500 | 凸緣螺帽 | 1 | | | | | |
| 15 | 93210–09859 | 護油圈 | 1 | | | | | |
| 16 | 5ML–F5377–00 | 軸環 | 1 | | | | | |
| 17 | 93210–14802 | 護油圈 | 2 | | | | | |

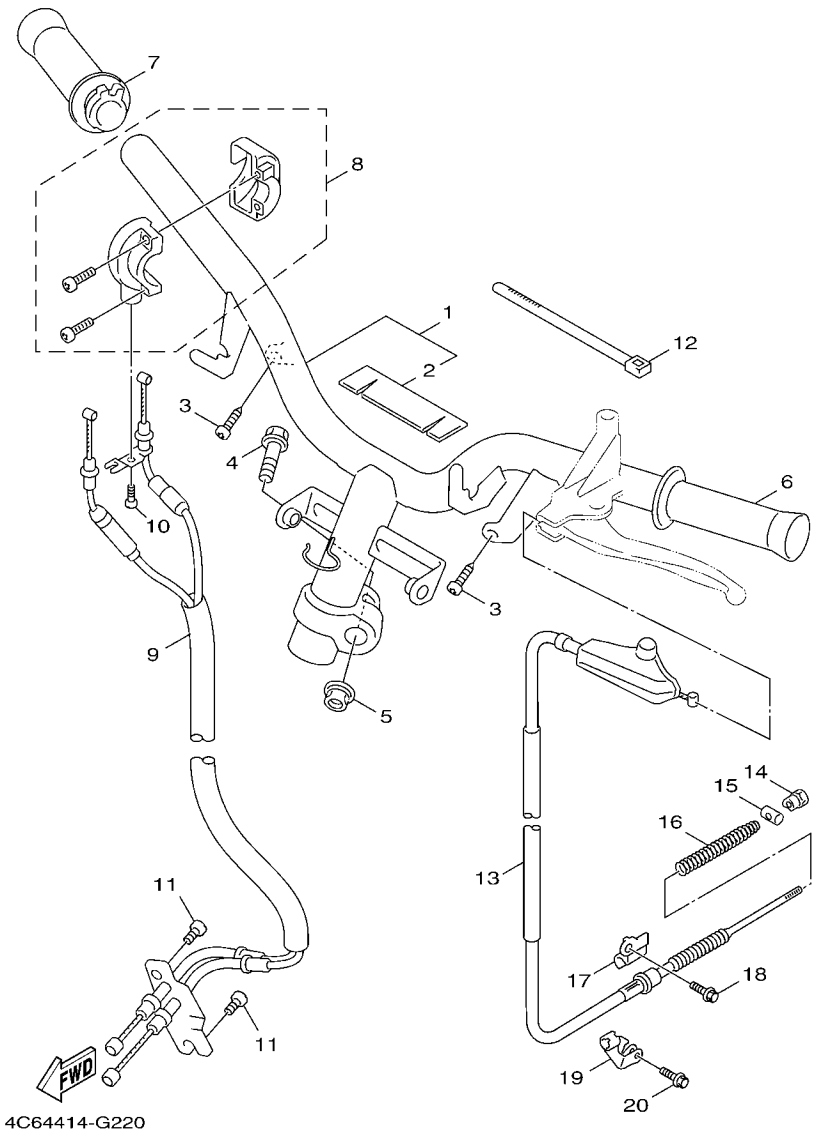


## FIG. 22 轉向把手,鋼索

| 項次 | 部品番號 | 部品名稱 | 4C64 | | | | | 備註 |
|---|---|---|---|---|---|---|---|---|
| 1 | 4C6–XF611–00 | 把手整體 | 1 | | | | | |
| 2 | 5ML–F6113–00 | .防震墊 | 1 | | | | | |
| 3 | 97707–50016 | 攻螺絲 | 2 | | | | | |
| 4 | 90105–10036 | 墊圈座帽螺栓 | 1 | | | | | |
| 5 | 90185–10801 | 自鎖螺帽 | 1 | | | | | |
| 6 | 5ML–F6241–01 | 左握把 | 1 | | | | | |
| 7 | 5UA–F6240–00 | 右握把總成 | 1 | | | | | |
| 8 | 5UA–F6270–01 | 握把蓋總成 | 1 | | | | | |
| 9 | 4C6–F6301–00 | 節流鋼索總成 | 1 | | | | | |
| 10 | 98507–05010 | 盤頭螺絲 | 1 | | | | | |
| 11 | 92012–05010 | 螺絲 | 2 | | | | | |
| 12 | 90464–12812 | 夾 | 1 | | | | | |
| 13 | 5ML–F6351–01 | 剎車鋼索 2 | 1 | | | | | |
| 14 | 90179–06843 | 螺帽 | 1 | | | | | |
| 15 | 90249–12008 | 銷 | 1 | | | | | |
| 16 | 90501–16801 | 壓力彈簧 | 1 | | | | | |
| 17 | 5ML–F637G–00 | 鋼索座 | 1 | | | | | |
| 18 | 95807–06012 | 凸緣螺栓 | 1 | | | | | |
| 19 | 1P3–F637H–00 | 固定座 | 1 | | | | | |
| 20 | 95827–06012 | 凸緣螺栓 | 1 | | | | | |

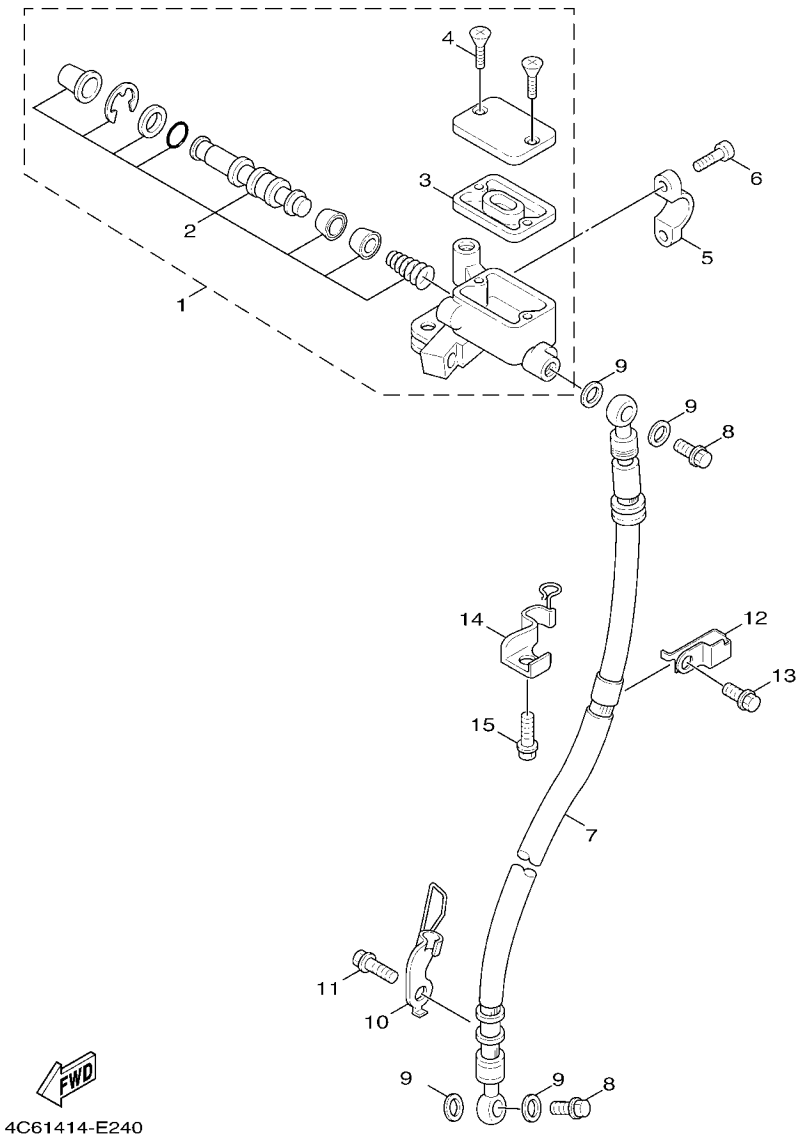


## FIG. 23 前主缸

| 項次 | 部品番號 | 部品名稱 | 4C64 | | | | | 備註 |
|---|---|---|---|---|---|---|---|---|
| 1 | 4C6–F5870–00 | 主缸總成 | 1 | | | | | |
| 2 | 5NW–W0041–00 | .主缸推進器 | 1 | | | | | |
| 3 | 3GF–F5854–00 | .油槽隔片 | 1 | | | | | |
| 4 | 98780–04012 | .平頭螺絲 | 1 | | | | | |
| 5 | 5ML–F5867–00 | 主缸支架 | 1 | | | | | |
| 6 | 91317–06025 | 六角套頭螺栓 | 2 | | | | | |
| 7 | 4C6–F5872–00 | 剎車管 | 1 | | | | | |
| 8 | 90401–10805 | 接合螺栓 | 2 | | | | | |
| 9 | 90201–10118 | 平墊圈 | 4 | | | | | |
| 10 | 4C6–F5875–00 | 剎車管座 1 | 1 | | | | | |
| 11 | 95807–06012 | 凸緣螺栓 | 1 | | | | | |
| 12 | 5ML–F5876–00 | 剎車管座 2 | 1 | | | | | |
| 13 | 95807–06014 | 凸緣螺栓 | 1 | | | | | |
| 14 | 5ML–F5887–00 | 剎車管座 | 1 | | | | | |
| 15 | 95807–06014 | 凸緣螺栓 | 1 | | | | | |

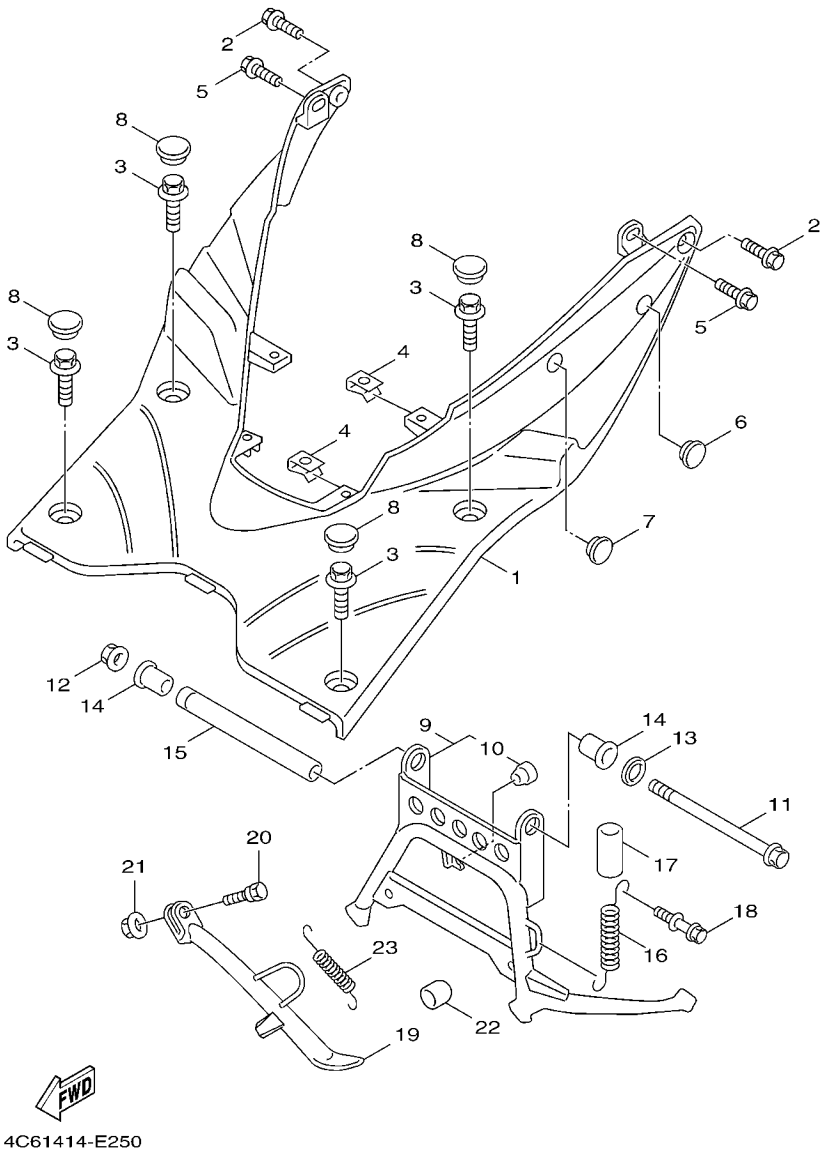


## FIG. 24 支架,置腳踏

| 項次 | 部品番號 | 部品名稱 | 4C64 | | | | | 備註 |
|---|---|---|---|---|---|---|---|---|
| 1 | 4C6–F7481–00 | 置腳踏板 | 1 | | | | | |
| 2 | 90119–06821 | 六角套頭螺栓 | 2 | | | | | |
| 3 | 90119–06874 | 六角套頭螺栓 | 4 | | | | | |
| 4 | 90183–05807 | 彈簧螺帽 | 4 | | | | | |
| 5 | 97707–50016 | 攻螺絲 | 2 | | | | | |
| 6 | 3GF–F6199–00 | 堵塞 | 1 | | | | | |
| 7 | 4DH–F6199–01 | 堵塞 | 2 | | | | | |
| 8 | 5HK–F7475–00 | 蓋 1 | 4 | | | | | |
| 9 | 5ML–XF711–00 | 主支架 | 1 | | | | | |
| 10 | 5ML–F7114–00 | .停止器 | 1 | | | | | |
| 11 | 5ML–F7117–00 | 螺栓 | 1 | | | | | |
| 12 | 95604–08200 | 螺帽 | 1 | | | | | |
| 13 | 90201–08810 | 平墊圈 | 1 | | | | | |
| 14 | 5ML–F7121–00 | 襯套 | 2 | | | | | |
| 15 | 5ML–F7113–00 | 軸環 | 1 | | | | | |
| 16 | 90506–40800 | 拉力彈簧 | 1 | | | | | |
| 17 | 5ML–F7254–00 | 扣環 | 1 | | | | | |
| 18 | 5TY–F7311–00 | 側支架 | 1 | | | | | |
| 19 | 90109–10005 | 螺栓 | 1 | | | | | |
| 20 | 90185–10110 | 自鎖螺帽 | 1 | | | | | |
| 21 | 5CA–F7114–00 | 停止器 | 1 | | | | | |
| 22 | 90506–26803 | 拉力彈簧 | 1 | | | | | |
| 23 | 90445–32800 | 管 | 1 | | | | | |

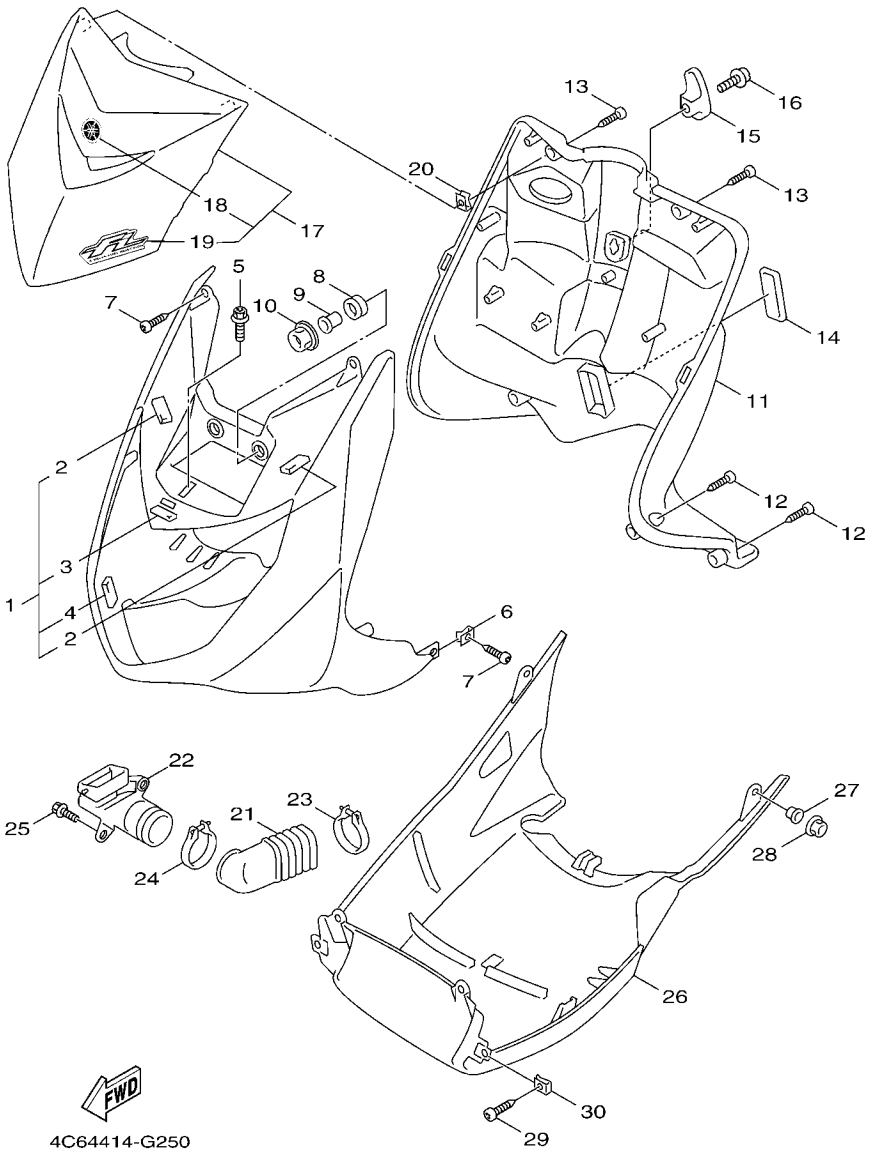


## FIG. 25 腳防護板

| 項次 | 部品番號 | 部品名稱 | 4C64 | | | | | 備註 |
|---|---|---|---|---|---|---|---|---|
| 1 | 4C6–XF831–00–P0 | 腳防護板 1 | 1 | | | | | 用於黑銀 |
| | 4C6–XF831–10–GE | 腳防護板 1 | 1 | | | | | 用於白銀 |
| | 4C6–XF831–10–PA | 腳防護板 1 | 1 | | | | | 用於深藍銀 |
| | 4C6–XF831–00–PB | 腳防護板 1 | 1 | | | | | 用於黃銀 |
| 2 | 5ML–F834E–00 | 防震墊 | 2 | | | | | |
| 3 | 5ML–F8372–01 | 防震墊 | 1 | | | | | |
| 4 | 5ML–F1541–00 | 防震墊 | 2 | | | | | |
| 5 | 90159–06827 | 螺絲附墊圈 | 1 | | | | | |
| 6 | 90183–05803 | 彈簧螺帽 | 2 | | | | | |
| 7 | 97707–50016 | 攻螺絲 | 4 | | | | | |
| 8 | 90480–13398 | 索環 | 2 | | | | | |
| 9 | 90387–067N5 | 軸環 | 2 | | | | | |
| 10 | 95707–06500 | 凸緣螺帽 | 2 | | | | | |
| 11 | 4C6–F8300–00 | 腳防護板總成 | 1 | | | | | |
| 12 | 97707–50016 | 攻螺絲 | 4 | | | | | |
| 13 | 90169–05001 | 攻螺絲 | 2 | | | | | |
| 14 | 5FM–F8349–00 | 蓋 | 1 | | | | | |
| 15 | 5JS–F8257–40 | 鉤 1 | 1 | | | | | |
| 16 | 90159–06822 | 螺絲附墊圈 | 1 | | | | | |
| 17 | 4P9–XF834–00–P0 | 護片 | 1 | | | | | 用於黑銀 |
| | 4P9–XF834–00–GE | 護片 | 1 | | | | | 用於白銀 |
| | 4P9–XF834–00–P7 | 護片 | 1 | | | | | 用於深藍銀 |
| | 4P9–XF834–00–P8 | 護片 | 1 | | | | | 用於黃銀 |
| 18 | 5PN–F8445–00 | .標誌 | 1 | | | | | |
| 19 | 1P5–F8315–10 | .標誌 | 1 | | | | | |
| 20 | 90183–05807 | 彈簧螺帽 | 2 | | | | | |
| 21 | 5ML–F838N–00 | 導管 1 | 1 | | | | | |

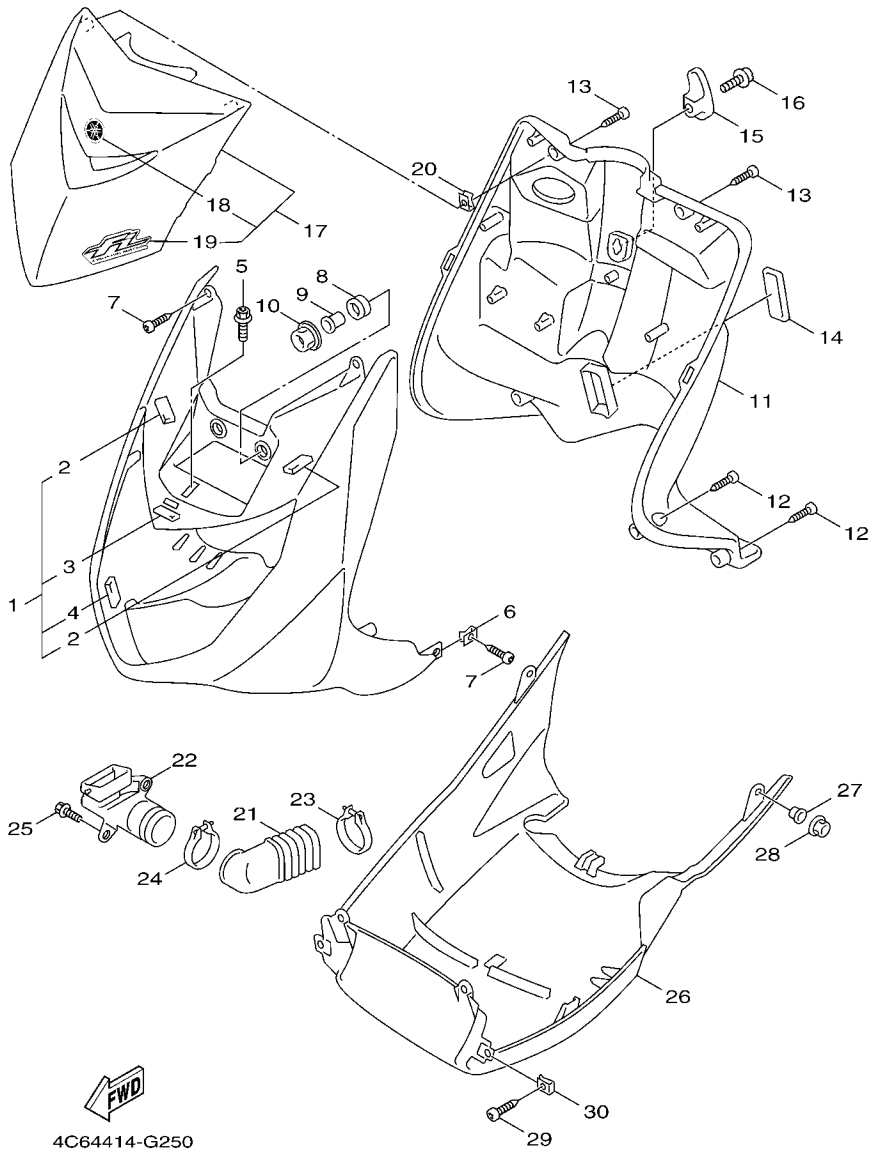


## FIG. 25 腳防護板

| 項次 | 部品番號 | 部品名稱 | 4C64 | | | | | 備註 |
|---|---|---|---|---|---|---|---|---|
| 22 | 5ML–F838R–00 | 導管 2 | 1 | | | | | |
| 23 | 5CA–F1823–00 | 夾 | 1 | | | | | |
| 24 | 90450–53061 | 軟管夾 | 1 | | | | | |
| 25 | 90109–063F1 | 螺栓 | 2 | | | | | |
| 26 | 4C6–F8385–01 | 下蓋 | 1 | | | | | |
| 27 | 90387–062M9 | 軸環 | 2 | | | | | |
| 28 | 95707–06500 | 凸緣螺帽 | 2 | | | | | |
| 29 | 97707–50012 | 攻螺絲 | 2 | | | | | |
| 30 | 90183–05807 | 彈簧螺帽 | 2 | | | | | |

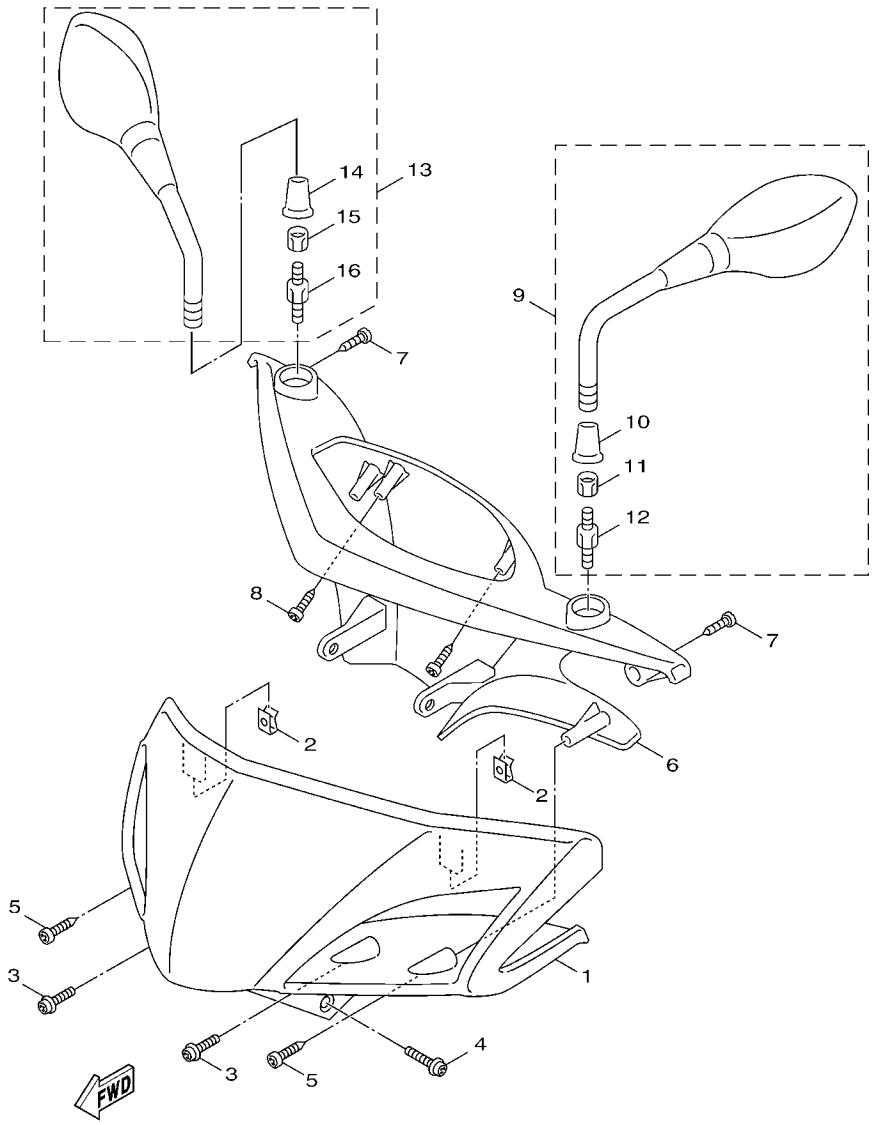


## FIG. 26 整流罩 1

| 項次 | 部品番號 | 部品名稱 | 4C64 | | | | | 備註 |
|---|---|---|---|---|---|---|---|---|
| 1 | 4C6–F6143–00–P0 | 把手蓋 | 1 | | | | | 用於黑銀 |
| | 4C6–F6143–00–GE | 把手蓋 | 1 | | | | | 用於白銀 |
| | 4C6–F6143–00–PA | 把手蓋 | 1 | | | | | 用於深藍銀 |
| | 4C6–F6143–00–PB | 把手蓋 | 1 | | | | | 用於黃銀 |
| 2 | 90183–05807 | 彈簧螺帽 | 2 | | | | | |
| 3 | 90159–05028 | 螺絲附墊圈 | 2 | | | | | |
| 4 | 90159–05802 | 螺絲附墊圈 | 2 | | | | | |
| 5 | 97707–50016 | 攻螺絲 | 2 | | | | | |
| 6 | 4C6–F6145–01 | 把手蓋 2 | 1 | | | | | |
| 7 | 90160–05803 | 攻螺絲 | 2 | | | | | |
| 8 | 97707–50016 | 攻螺絲 | 4 | | | | | |
| 9 | 3C9–F6280–00 | 左後鏡視總成 | 1 | | | | | |
| 10 | 5NV–F629T–10 | .保護罩 | 1 | | | | | |
| 11 | 1P3–F6294–00 | .螺帽 | 1 | | | | | |
| 12 | 3C9–F6386–00 | .特殊螺栓 | 1 | | | | | |
| 13 | 3C9–F6290–00 | 右後視鏡總成 | 1 | | | | | |
| 14 | 5NV–F629T–10 | .保護罩 | 1 | | | | | |
| 15 | 1P3–F6294–00 | .螺帽 | 1 | | | | | |
| 16 | 3C9–F6356–00 | .特殊螺栓 | 1 | | | | | |

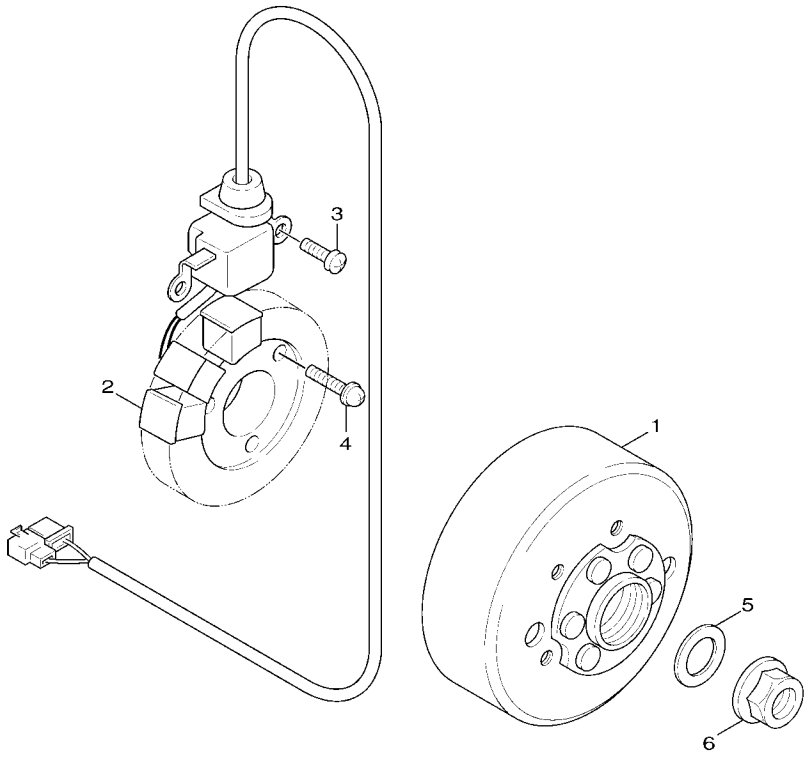

5TY1414-2280

## FIG. 27 發電機

| 項次 | 部品番號 | 部品名稱 | 4C64 | | | | | 備註 |
|---|---|---|---|---|---|---|---|---|
| 1 | 1P5–H1450–00 | 轉子總成 | 1 | | | | | |
| 2 | 4C6–H1410–00 | 電樞總成 | 1 | | | | | |
| 3 | 98507–06016 | 盤頭螺絲 | 2 | | | | | |
| 4 | 97607–06225 | 六角螺栓附墊圈 | 3 | | | | | |
| 5 | 90201–12688 | 平墊圈 | 1 | | | | | |
| 6 | 90179–12248 | 螺帽 | 1 | | | | | |

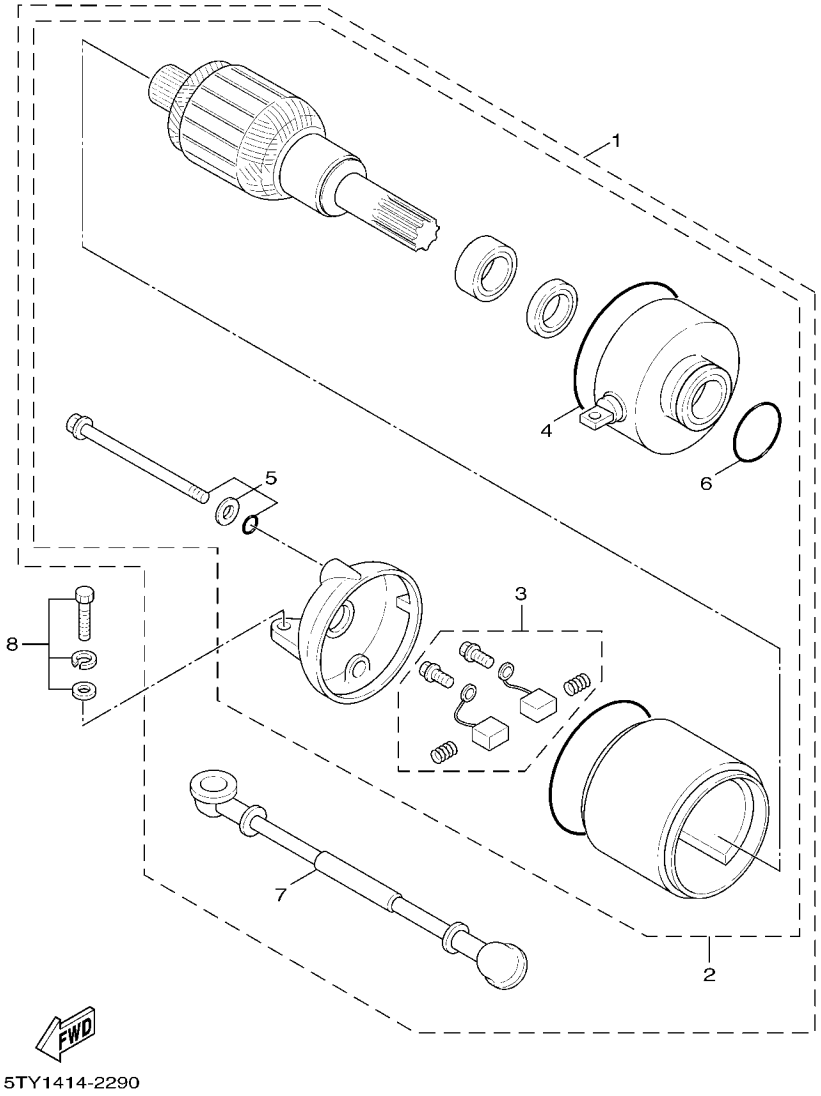


## FIG. 28 起動馬達

| 項次 | 部品番號 | 部品名稱 | 4C64 | | | | | 備註 |
|---|---|---|---|---|---|---|---|---|
| 1 | 4C6–H1800–00 | 起動馬達總成 | 1 | | | | | |
| 2 | 5ML–W8180–00 | .起動馬達組 | 1 | | | | | |
| 3 | 3KW–H1801–00 | ..碳刷組 | 1 | | | | | |
| 4 | 93210–55669 | ..護油圈 | 1 | | | | | |
| 5 | 3UH–H1828–01 | ..螺栓 | 2 | | | | | |
| 6 | 93210–26668 | ..護油圈 | 1 | | | | | |
| 7 | 4C6–H183G–00 | .起動馬達線 | 1 | | | | | |
| 8 | 97507–06525 | 六角螺栓附墊圈 | 2 | | | | | |

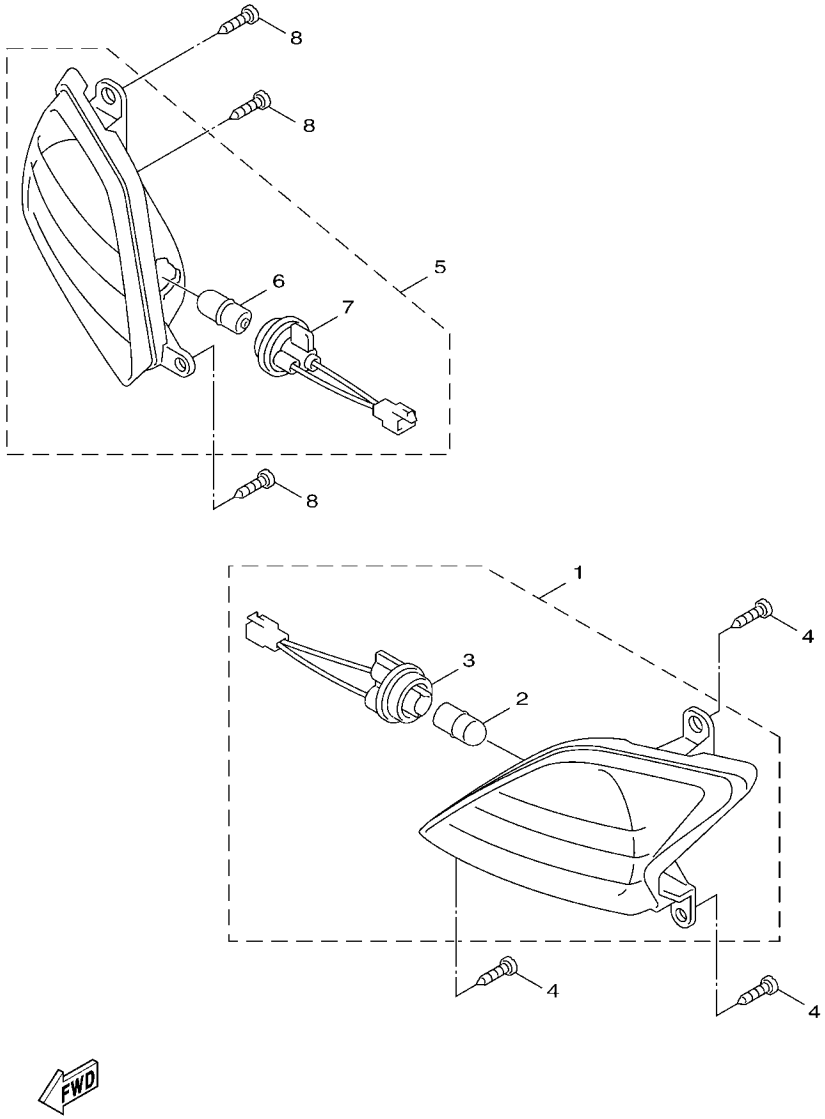


## FIG. 29 方向燈

| 項次 | 部品番號 | 部品名稱 | 4C64 | | | | | 備註 |
|---|---|---|---|---|---|---|---|---|
| 1 | 4C6–H3310–10 | 左前方向燈總成 | 1 | | | | | |
| 2 | 5FM–H3311–10 | .方向燈燈泡 | 1 | | | | | |
| 3 | 4C6–H331J–00 | .燈座 | 1 | | | | | |
| 4 | 97707–50016 | 攻螺絲 | 3 | | | | | |
| 5 | 4C6–H3320–10 | 右前方向燈總成 | 1 | | | | | |
| 6 | 5FM–H3311–10 | .方向燈燈泡 | 1 | | | | | |
| 7 | 4C6–H331R–00 | .燈座(R) | 1 | | | | | |
| 8 | 97707–50016 | 攻螺絲 | 3 | | | | | |

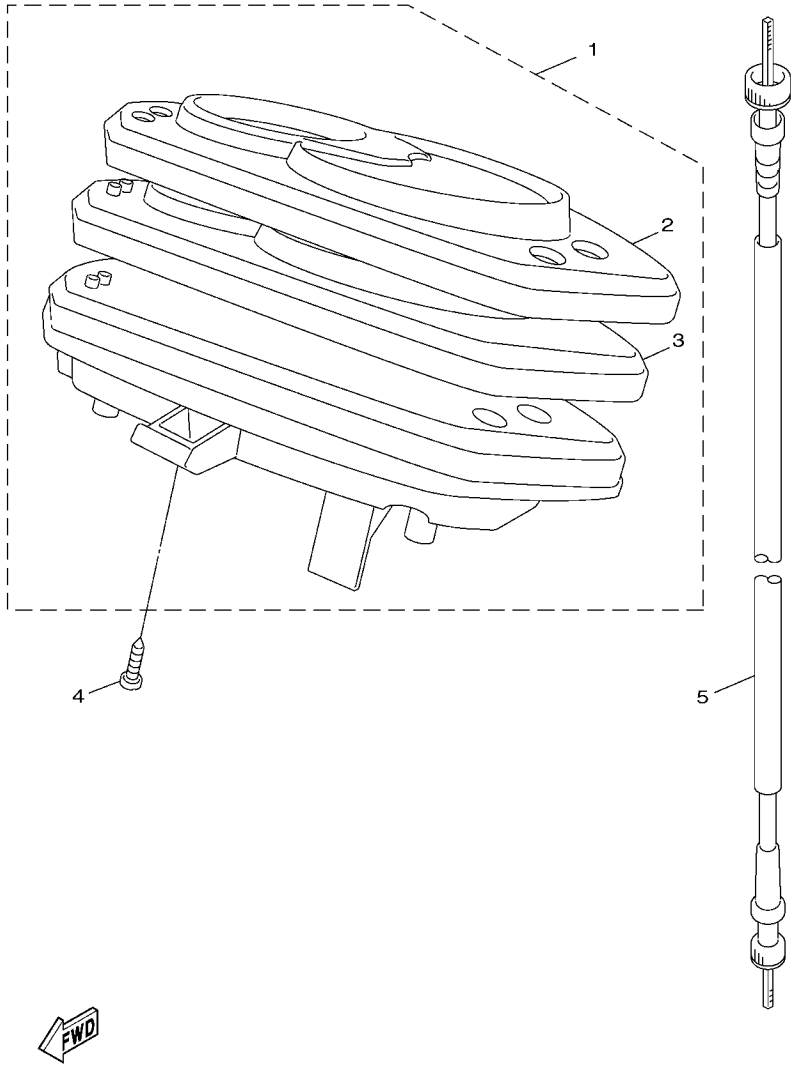


## FIG. 30 計量表

| 項次 | 部品番號 | 部品名稱 | 4C64 | | | | | 備註 |
|---|---|---|---|---|---|---|---|---|
| 1 | 4C6–H3510–21 | 速度錶總成 | 1 | | | | | |
| 2 | 4C6–H353G–11 | .上蓋 | 1 | | | | | |
| 3 | 4C6–H353K–01 | .速度錶蓋 | 1 | | | | | |
| 4 | 97707–50016 | 攻螺絲 | 3 | | | | | |
| 5 | 4C6–H3550–00 | 速度錶鋼索總成 | 1 | | | | | |

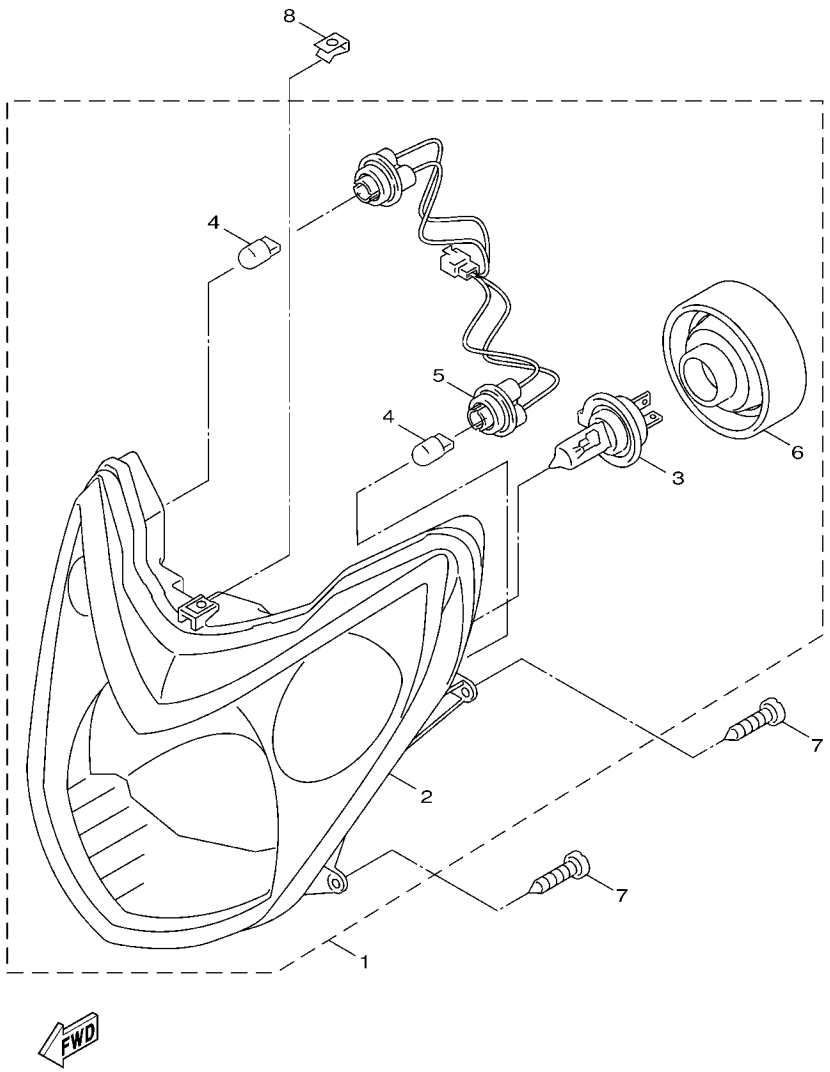


## FIG. 31 前燈

| 項次 | 部品番號 | 部品名稱 | 4C64 | | | | | 備註 |
|---|---|---|---|---|---|---|---|---|
| 1 | 4C6–H4310–30 | 前燈總成 | 1 | | | | | |
| 2 | 4C6–H430A–30 | .前燈單元 | 1 | | | | | |
| 3 | 1B6–H4314–00 | .前燈泡 | 1 | | | | | |
| 4 | 5SK–H4347–00 | .燈泡 | 2 | | | | | |
| 5 | 4C6–H4340–00 | .插座線總成 | 1 | | | | | |
| 6 | 4C6–H4396–00 | .蓋 | 1 | | | | | |
| 7 | 97707–60020 | 攻螺絲 | 4 | | | | | |
| 8 | 90183–06801 | 彈簧螺帽 | 1 | | | | | |

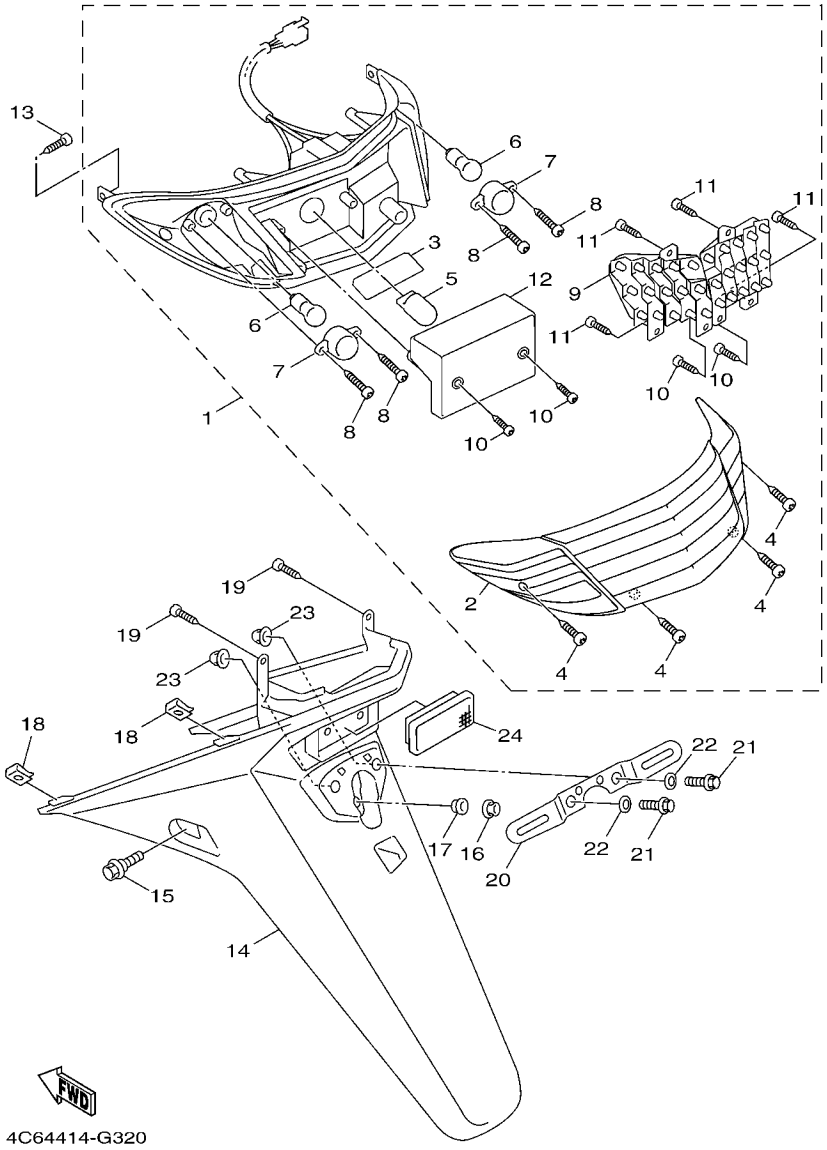


## FIG. 32 後燈

| 項次 | 部品番號 | 部品名稱 | 4C64 | | | | | 備註 |
|---|---|---|---|---|---|---|---|---|
| 1 | 4C6–H4700–30 | 後燈總成 | 1 | | | | | |
| 2 | 4C6–H472C–30 | .後燈燈罩 | 1 | | | | | |
| 3 | 4C6–H4743–00 | .牌照燈罩 | 1 | | | | | |
| 4 | 4C6–H4724–00 | .螺絲 | 4 | | | | | |
| 5 | 5SK–H4347–00 | .燈泡 | 1 | | | | | |
| 6 | 5FM–H3311–10 | .方向燈燈泡 | 2 | | | | | |
| 7 | 4C6–H333M–00 | .燈泡蓋 | 2 | | | | | |
| 8 | 4C6–H4325–00 | .螺絲 | 4 | | | | | |
| 9 | 4C6–H3720–00 | .燈泡總成 | 1 | | | | | |
| 10 | 4C6–H4325–00 | .螺絲 | 4 | | | | | |
| 11 | 4C6–H4526–00 | .螺絲 | 4 | | | | | |
| 12 | 4C6–H4797–00 | .牌照燈蓋 | 1 | | | | | |
| 13 | 97707–50016 | 攻螺絲 | 2 | | | | | |
| 14 | 4C6–F1685–01 | 牌照支架 | 1 | | | | | |
| 15 | 90109–06849 | 螺栓 | 2 | | | | | |
| 16 | 90179–06833 | 螺帽 | 1 | | | | | |
| 17 | 90387–06868 | 軸環 | 1 | | | | | |
| 18 | 90183–05807 | 彈簧螺帽 | 4 | | | | | |
| 19 | 97707–50016 | 攻螺絲 | 2 | | | | | |
| 20 | 4C6–H4751–00 | 牌照支架 | 1 | | | | | |
| 21 | 95807–06014 | 凸緣螺栓 | 2 | | | | | |
| 22 | 90201–06557 | 平墊圈 | 2 | | | | | |
| 23 | 95607–06100 | U型螺帽 | 2 | | | | | |
| 24 | 5ST–H5130–00 | 後反射鏡總成 | 1 | | | | | |

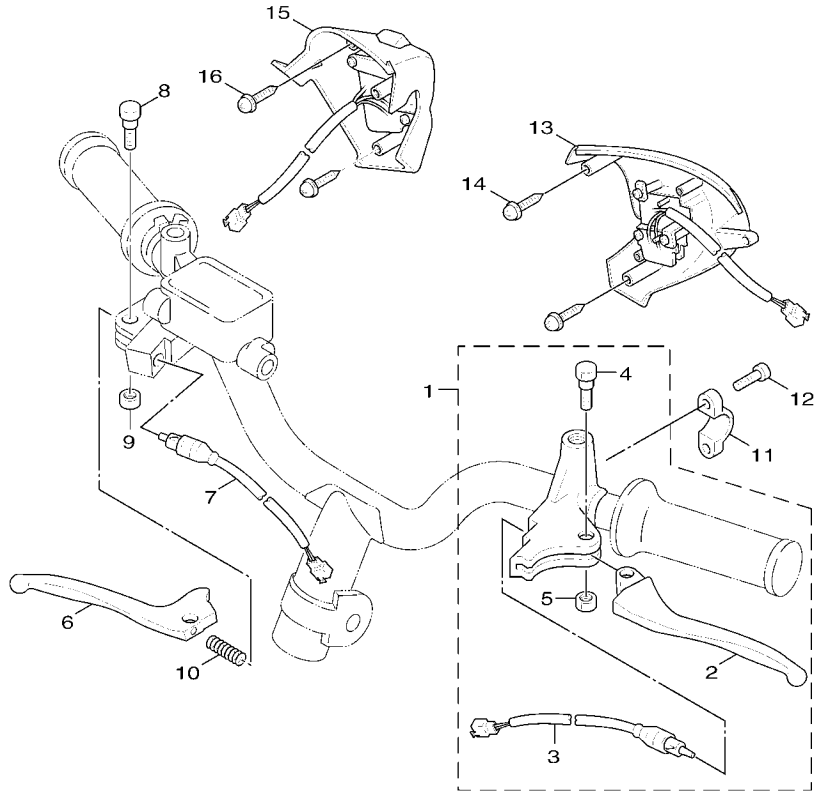

5TY1414-2341

## FIG. 33 把手開關,把手

| 項次 | 部品番號 | 部品名稱 | 4C64 | | | | | 備註 |
|---|---|---|---|---|---|---|---|---|
| 1 | 5ML–H2910–00 | 左把手控制座總成 | 1 | | | | | |
| 2 | 5ML–H3912–00 | .左把手 | 1 | | | | | |
| 3 | 5ML–H3980–10 | .剎車燈開關總成 | 1 | | | | | |
| 4 | 5NV–H3945–00 | .把手螺栓 | 1 | | | | | |
| 5 | 95607–05100 | .U型螺帽 | 1 | | | | | |
| 6 | 5ML–H3922–00 | 把手 | 1 | | | | | |
| 7 | 5ML–H3980–00 | 剎車燈開關總成 | 1 | | | | | |
| 8 | 90109–06577 | 螺栓 | 1 | | | | | |
| 9 | 95607–06100 | U型螺帽 | 1 | | | | | |
| 10 | 90501–10312 | 壓力彈簧 | 1 | | | | | |
| 11 | 3GF–F5867–00 | 主缸支架 | 1 | | | | | |
| 12 | 91317–06025 | 六角套頭螺栓 | 2 | | | | | |
| 13 | 4C6–H3973–11 | 把手開關 3 | 1 | | | | | |
| 14 | 97707–50012 | 攻螺絲 | 1 | | | | | |
| 15 | 4C6–H3976–10 | 把手開關 | 1 | | | | | |
| 16 | 95707–06500 | 凸緣螺帽 | 2 | | | | | |

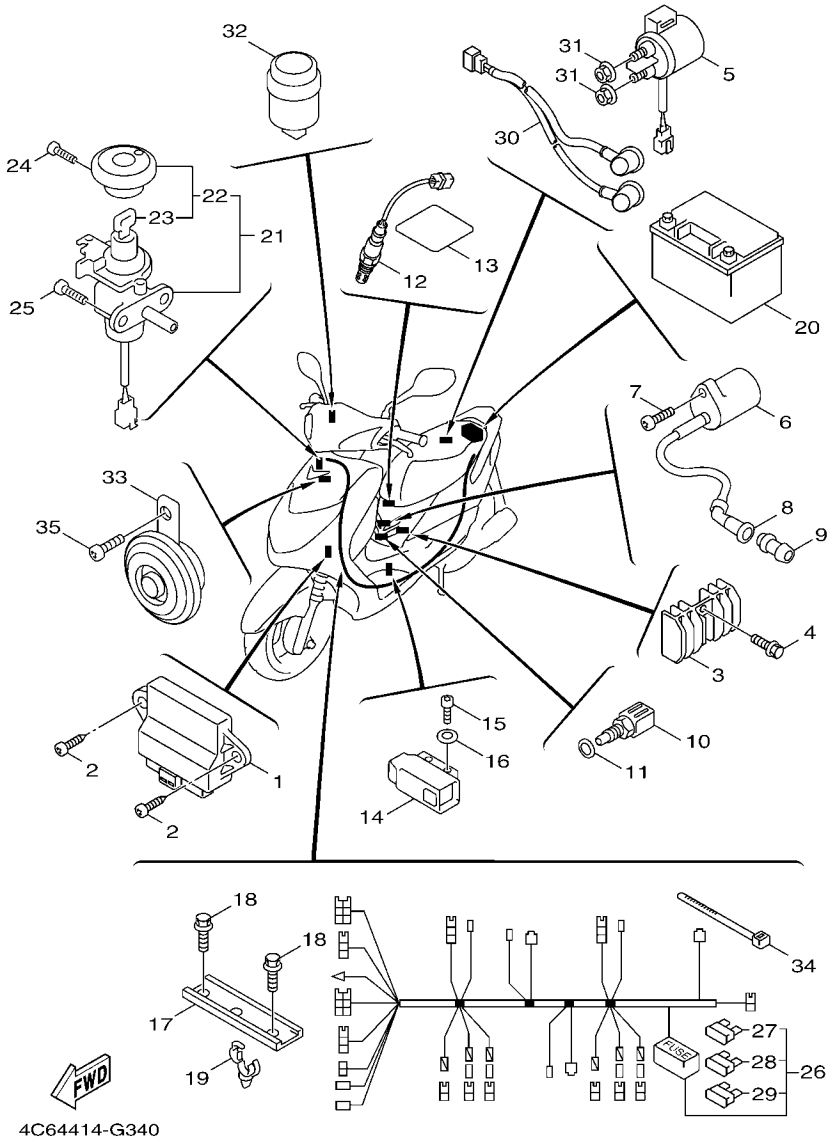


## FIG. 34 電裝 1

| 項次 | 部品番號 | 部品名稱 | 4C64 | | | | | 備註 |
|---|---|---|---|---|---|---|---|---|
| 1 | 4C6–H591A–10 | 引擎控制單元 | 1 | | | | | |
| 2 | 97707–50016 | 攻螺絲 | 2 | | | | | |
| 3 | 5ML–H1960–00 | 整流器調整器總成 | 1 | | | | | |
| 4 | 97607–06220 | 六角螺栓附墊圈 | 2 | | | | | |
| 5 | 4P9–H1940–00 | 起動繼電器 | 1 | | | | | |
| 6 | 1P5–H2310–00 | 點火線圈總成 | 1 | | | | | |
| 7 | 98507–06018 | 盤頭螺絲 | 2 | | | | | |
| 8 | 1P5–H2370–00 | 火星塞蓋總成 | 1 | | | | | |
| 9 | 4P9–H2372–00 | 火星塞蓋封圈 | 1 | | | | | |
| 10 | 4P9–83591–00 | 水箱感溫器 | 1 | | | | | |
| 11 | 90430–10802 | 墊片 | 1 | | | | | |
| 12 | 1B9–8592A–00 | 感應器 | 1 | | | | | |
| 13 | 5FA–E4452–00 | 封圈 | 1 | | | | | |
| 14 | 5PS–82576–01 | 引擎停止器 | 1 | | | | | |
| 15 | 91317–04025 | 六角套頭螺栓 | 2 | | | | | |
| 16 | 90201–04325 | 平墊圈 | 2 | | | | | |
| 17 | 4P9–E546C–00 | 固定座 | 1 | | | | | |
| 18 | 97527–06512 | 六角螺栓附墊圈 | 2 | | | | | |
| 19 | 90464–25803 | 夾 | 1 | | | | | |
| 20 | 1P3–H2100–10 | 蓄電池總成 | 1 | | | | | |
| 21 | 4C6–H2501–20 | 主開關舵鎖總成 | 1 | | | | | |
| 22 | 4C6–WH250–20–A0 | .主開關蓋組(附鑰匙) | 1 | | | | | |
| | 4C6–WH250–20–C0 | .主開關蓋組(附鑰匙) | 1 | | | | | |
| 23 | 4C6–H2511–00 | 鑰匙模 | 1 | | | | | |
| 24 | 90119–05004 | 六角套頭螺栓 | 1 | | | | | |
| 25 | 98507–06014 | 盤頭螺絲 | 2 | | | | | |
| 26 | 4C6–H2590–20 | 電線總成 | 1 | | | | | |

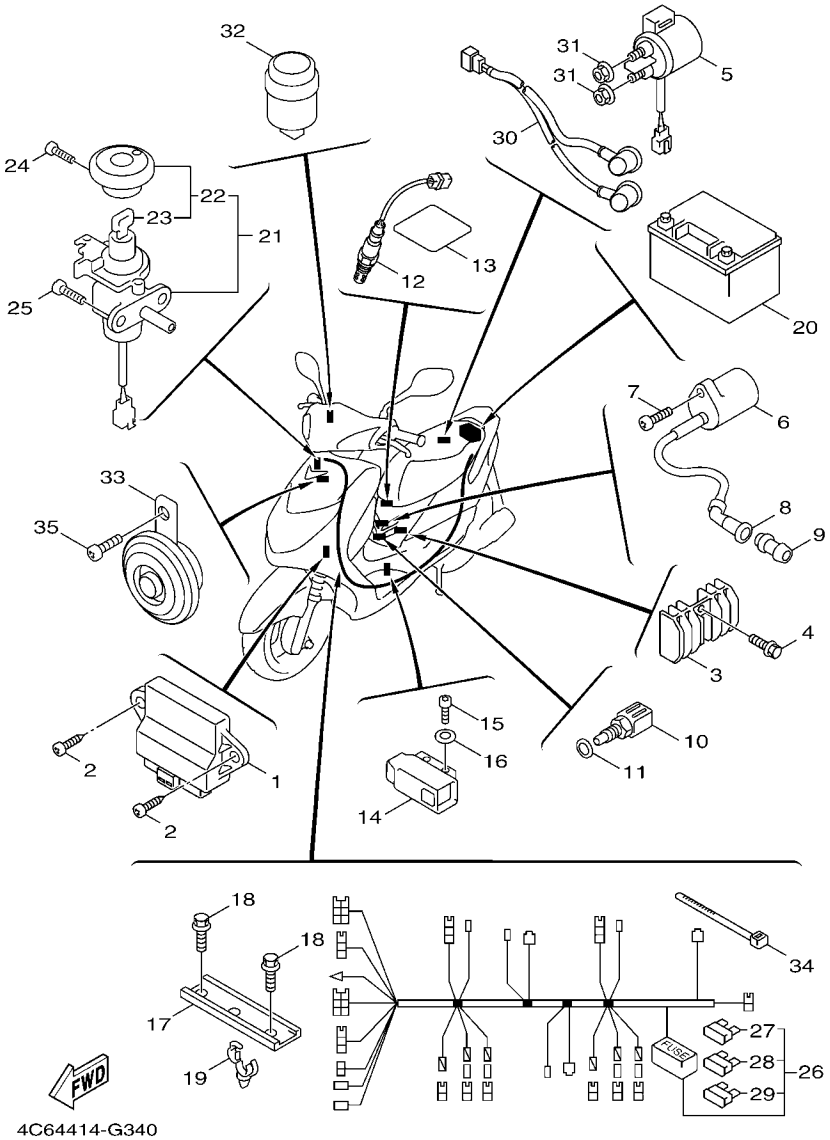


## FIG. 34 電裝 1

| 項次 | 部品番號 | 部品名稱 | 4C64 | | | | | 備註 |
|---|---|---|---|---|---|---|---|---|
| 27 | 1P5–H2151–00 | .保險絲 | 3 | | | | | |
| 28 | 5MH–H2151–00 | .保險絲 | 2 | | | | | |
| 29 | 5ML–H2151–20 | .保險絲 | 3 | | | | | |
| 30 | 5S9–H2541–00 | 導線 | 1 | | | | | |
| 31 | 95307–06700 | 六角螺帽 | 2 | | | | | |
| 32 | 5CA–H3350–10 | 方向續繼器總成 | 1 | | | | | |
| 33 | 4P9–H3371–00 | 喇叭 | 1 | | | | | |
| 34 | 90465–13152 | 夾 | 1 | | | | | |
| 35 | 95027–06012 | 凸緣螺栓 | 1 | | | | | |

| 部品番號 | 項次 |
|---|---|
| 5ML–11133–10 | 1 – 2 |
| 5ML–11134–10 | 1 – 3 |
| 5ML–12113–00 | 3 – 4 |
| 4C6–13930–00 | 6 – 2 |
| 5CA–14147–00 | 6 – 3 |
| 5VU–24135–00 | 17 – 9 |
| 5CA–2414G–01 | 17 – 7 |
| 5PS–82576–01 | 34 – 14 |
| 4P9–83591–00 | 34 – 10 |
| 1B9–8592A–00 | 34 – 12 |
| 4P9–E1102–00 | 1 – 1 |
| 5ML–E111F–00 | 3 – 23 |
| 5ML–E1145–00 | 3 – 14 |
| 4CW–E1155–00 | 1 – 10 |
| 5ML–E1160–00 | 1 – 6 |
| 5ML–E1165–00 | 1 – 8 |
| 5ML–E1181–00 | 1 – 18 |
| 5ML–E1185–00 | 1 – 7 |
| 5ML–E1186–00 | 1 – 13 |
| 5ML–E1351–20 | 1 – 23 |
| 5ML–E1391–00 | 1 – 26 |
| 5ML–E1392–00 | 1 – 27 |
| 4C6–E1400–00 | 2 – 1 |
| 4C6–E1422–00 | 2 – 5 |
| 4C6–E1603–00 | 2 – 13 |
| 5ML–E1631–10 | 2 – 10 |
| 5LW–E1633–00 | 2 – 11 |
| 5LW–E1651–00 | 2 – 4 |
| 5ML–E1681–00 | 2 – 2 |
| 4C6–E2111–00 | 3 – 1 |
| 4C6–E2117–00 | 3 – 6 |
| 5WG–E2118–00 | 3 – 5 |
| 5ML–E2119–00 | 3 – 3 |
| 4C6–E2121–00 | 3 – 2 |
| 1P3–E2151–00 | 3 – 7 |
| 5HK–E2156–00 | 3 – 11 |
| 4CW–E2157–00 | 3 – 26 |
| 5FM–E2159–00 | 3 – 9 |
| 1P3–E2161–00 | 3 – 8 |
| 1P3–E2170–01 | 3 – 12 |
| 5LW–E2176–00 | 3 – 13 |
| 5ML–E2210–00 | 3 – 19 |
| 4DH–E2213–01 | 3 – 21 |
| 5ML–E2231–00 | 3 – 17 |
| 5UA–E2232–00 | 3 – 20 |
| 5ML–E2241–00 | 3 – 18 |
| 5TY–E2611–00 | 4 – 9 |
| 5ML–E2651–00 | 4 – 1 |
| 4C6–E2652–00 | 4 – 4 |
| 5ML–E2653–01 | 4 – 11 |
| 5ML–E2658–00 | 4 – 6 |
| 5ML–E2659–00 | 4 – 2 |
| 5ML–E2668–00 | 4 – 7 |
| 5ML–E2682–01 | 4 – 14 |
| 1P3–E3300–00 | 5 – 1 |
| 1P3–E3316–00 | 5 – 2 |
| 1P3–E3318–00 | 5 – 4 |
| 5ML–E3324–00 | 2 – 8 |
| 1P3–E3325–00 | 5 – 3 |
| 1P3–E3362–00 | 5 – 5 |
| 1P3–E3364–00 | 5 – 6 |
| 5ST–E3365–00 | 5 – 7 |
| 5ML–E3411–00 | 5 – 11 |
| 5ML–E3416–00 | 8 – 13 |
| 5ML–E3452–00 | 2 – 6 |
| 5ML–E3475–00 | 5 – 8 |
| 4P9–E3556–00 | 6 – 5 |
| 3KW–E3569–00 | 4 – 3 |
| 4P9–E3575–00 | 6 – 22 |
| 4C6–E3585–00 | 6 – 1 |
| 4P9–E3595–01 | 6 – 6 |
| 4C6–E3750–00 | 6 – 10 |
| 5ML–E3769–00 | 8 – 42 |
| 1P5–E3907–00 | 6 – 24 |
| 4P9–E4239–00 | 6 – 7 |
| 4C6–E4408–00 | 6 – 12 |
| 4C6–E4410–00 | 6 – 11 |
| 5TY–E4429–10 | 6 – 19 |
| 5TY–E442G–10 | 6 – 16 |
| 5TY–E4435–10 | 6 – 20 |
| 5TY–E443E–10 | 6 – 17 |
| 5JS–E4445–00 | 7 – 8 |
| 5TY–E4449–10 | 6 – 21 |
| 5TY–E4451–10 | 6 – 14 |
| 5FA–E4452–00 | 34 – 13 |
| 5TY–E4476–10 | 6 – 15 |
| 4C6–E4610–10–98 | 7 – 1 |
| 5SK–E4613–00 | 7 – 15 |
| 5JS–E4617–00 | 7 – 10 |
| 4C6–E4708–10 | 7 – 5 |
| 5ML–E4737–10 | 7 – 4 |
| 5JS–E4759–00 | 7 – 9 |
| 4CW–E4766–00 | 7 – 6 |
| 5JS–E4779–00 | 7 – 7 |
| 5ML–E5111–00 | 8 – 1 |
| 5ML–E5113–00 | 8 – 40 |
| 5ML–E5138–00 | 8 – 3 |
| 5ML–E5158–00 | 8 – 28 |
| 5ML–E5158–00 | 8 – 29 |
| 1B9–8592A–00 | 8 – 48 |
| 1B9–8592A–00 | 8 – 47 |
| 5ML–E5351–20 | 5 – 10 |
| 4C6–E5362–00 | 8 – 41 |
| 4Y4–E5363–00 | 8 – 16 |
| 5CA–E5371–00 | 8 – 5 |
| 5ML–E5404–00 | 8 – 43 |
| 5ML–E5407–00 | 8 – 50 |
| 4C6–E5411–00 | 8 – 23 |
| 5ML–E5417–00 | 8 – 32 |
| 5ML–E5421–00 | 8 – 18 |
| 4P9–E1102–00 | 8 – 27 |
| 5ML–E5451–00 | 8 – 24 |
| 5ML–E5453–00 | 8 – 35 |
| 5ML–E5455–00 | 8 – 30 |
| 5ML–E5461–00 | 8 – 19 |
| 4P9–E546C–00 | 34 – 17 |
| 5ML–E5472–00 | 8 – 49 |
| 4DM–E5481–00 | 8 – 53 |
| 5ML–E5481–00 | 8 – 26 |
| 5CA–E5521–00 | 9 – 8 |
| 5TY–E5524–00 | 9 – 1 |
| 5ML–E5532–00 | 9 – 10 |
| 5LW–E5538–00 | 9 – 3 |
| 5TY–E5570–01 | 9 – 5 |
| 5TY–E5645–00 | 9 – 12 |
| 5ML–E5650–00 | 9 – 6 |
| 5ML–E5657–00 | 10 – 14 |
| 5ML–E6111–01 | 10 – 1 |
| 4CW–E6611–00 | 10 – 4 |
| 1P5–E6620–01 | 10 – 27 |
| 1P5–E6626–00 | 10 – 28 |
| 5ML–E7211–01 | 11 – 6 |
| 5ML–E7410–01 | 11 – 1 |
| 5ML–E7421–01 | 11 – 5 |
| 4HP–E7611–00 | 10 – 18 |
| 5ML–E7620–02 | 10 – 7 |
| 5ML–E7623–00 | 10 – 11 |
| 5ML–E7632–00 | 10 – 10 |
| 4C6–E7641–00 | 10 – 17 |
| 4CW–E1155–00 | 10 – 26 |
| 4CW–E7653–00 | 10 – 12 |
| 4C6–E7660–00 | 10 – 20 |
| 4CW–E7664–00 | 10 – 24 |
| 5ML–E5113–00 | 10 – 21 |
| 4C6–F1110–20–33 | 12 – 1 |
| 5ML–F1161–01 | 12 – 15 |
| 5ML–F1208–00 | 12 – 23 |
| 1P5–F1359–01 | 12 – 26 |
| 1P5–F1374–00 | 12 – 24 |
| 5ML–F139X–00 | 18 – 25 |
| 4C6–F1415–00 | 12 – 13 |
| 4C6–F1420–10 | 12 – 2 |
| 5ML–F1480–10 | 12 – 6 |
| 3UH–F1481–00 | 12 – 3 |
| 5ML–F1481–00 | 12 – 11 |
| 4C6–F1511–00–GE | 13 – 1 |
| 4C6–F1511–00–P0 | 13 – 1 |
| 4C6–F1511–00–PA | 13 – 1 |
| 4C6–F1511–00–PB | 13 – 1 |
| 5ML–F1541–00 | 25 – 4 |
| 5ML–F1544–01 | 12 – 9 |
| 4C6–F1552–00 | 13 – 4 |
| 5CA–F1639–00 | 13 – 10 |
| 4C6–F1685–01 | 32 – 14 |
| 4C6–F1711–00 | 14 – 1 |
| 5FA–F1717–00 | 14 – 15 |
| 4C6–F1785–30 | 14 – 5 |
| 4C6–F1786–30 | 14 – 10 |
| 5CA–F1823–00 | 25 – 23 |
| 5ML–F2171–01 | 15 – 1 |
| 4C6–F2210–20 | 15 – 9 |
| 4X6–F2216–00 | 8 – 4 |
| | 15 – 8 |
| 4C6–F2220–20 | 15 – 10 |
| 5ML–F2417–00 | 13 – 8 |
| 4C6–F3102–20 | 16 – 2 |
| 4C6–F3103–20 | 16 – 20 |
| 4C6–F3108–00 | 16 – 43 |
| 4C6–F3110–00 | 16 – 4 |
| | 16 – 22 |
| 4C6–F3113–00 | 16 – 15 |
| | 16 – 33 |
| 4C6–F3126–20 | 16 – 3 |
| 4C6–F3136–20 | 16 – 21 |
| 4C6–F3141–00 | 16 – 13 |
| | 16 – 31 |
| 4C6–F3142–00 | 16 – 5 |
| | 16 – 23 |
| 4C6–F3145–00 | 16 – 11 |
| | 16 – 29 |
| 4C6–F3147–00 | 16 – 14 |
| | 16 – 32 |
| 4C6–F3151–00 | 16 – 7 |
| | 16 – 25 |
| 4C6–F3153–00 | 16 – 42 |
| 4C6–F3154–00 | 16 – 17 |
| | 16 – 35 |
| 4C6–F3155–00 | 16 – 16 |
| | 16 – 34 |
| 4C6–F3157–00 | 16 – 12 |
| | 16 – 30 |
| 4C6–F3158–00 | 16 – 9 |
| | 16 – 27 |
| 4C6–F3171–00 | 16 – 8 |
| | 16 – 26 |
| 4C6–F3181–00 | 16 – 10 |
| | 16 – 28 |
| 4C6–F318X–00 | 16 – 6 |
| | 16 – 24 |
| 4C6–F3191–00 | 16 – 18 |
| | 16 – 36 |
| 4C6–F3192–00 | 16 – 19 |
| | 16 – 37 |
| 5ML–F3317–00 | 16 – 44 |
| 4C6–F3340–00 | 16 – 38 |
| 4C6–F3346–00 | 16 – 41 |
| 4C6–F3411–10 | 16 – 40 |
| 4C6–F3412–00 | 16 – 46 |
| 4C6–F3413–00 | 16 – 49 |
| 4C6–F3414–00 | 16 – 48 |
| 4C6–F3416–00 | 16 – 51 |
| 4VP–F3418–00 | 16 – 54 |
| 4C6–F341D–00 | 16 – 50 |
| 4C6–F341E–00 | 16 – 47 |
| 3KW–F3462–00 | 16 – 39 |
| 4C6–F4110–10–33 | 17 – 1 |
| 5ML–F4115–00 | 17 – 3 |
| 5TY–F4170–00 | 17 – 38 |
| 5ML–F4180–00 | 17 – 25 |
| 5ML–F4183–00 | 17 – 2 |
| 4C6–F4280–00 | 17 – 16 |
| 5ML–F4313–00 | 17 – 23 |
| 5TY–F4314–00 | 17 – 29 |
| 5TY–F4315–00 | 17 – 43 |
| 5ML–F4316–10 | 17 – 11 |
| 4C6–F4317–00 | 17 – 13 |
| 4C6–F4318–00 | 17 – 32 |
| 4C6–F4322–00 | 17 – 40 |
| 5ML–F4339–00 | 17 – 4 |
| 3UH–F4376–00 | 17 – 31 |
| 3D0–F4491–00 | 17 – 6 |
| 4C6–F4494–00 | 17 – 34 |
| 1P3–F4610–00 | 17 – 21 |
| 1P3–F467E–00 | 17 – 10 |
| 4C6–F4723–00 | 18 – 18 |
| 4CW–F4726–01 | 18 – 3 |
| 4C6–F4730–10 | 18 – 1 |
| 4C6–F4737–00 | 18 – 21 |
| 4C6–F473R–00 | 18 – 6 |
| 5ML–F473T–00 | 18 – 8 |
| 1P3–F4747–01 | 12 – 30 |
| 4C6–F475M–00 | 18 – 2 |
| 4UE–F4780–02 | 18 – 13 |
| 1P3–F478E–00 | 18 – 15 |
| 4C6–F4812–00–GE | 18 – 11 |
| 4C6–F4812–00–P0 | 18 – 11 |
| 4C6–F4812–00–PA | 18 – 11 |
| 4C6–F4812–00–PB | 18 – 11 |
| 5ML–F5168–00–33 | 19 – 1 |
| 5ML–F5181–00 | 19 – 9 |
| 5ML–F5183–00 | 19 – 2 |
| 4C6–F5190–00 | 19 – 11 |
| 5ML–F5326–00 | 21 – 13 |
| 5ML–F5338–00–33 | 21 – 1 |
| 4VP–F533A–00 | 21 – 10 |
| 5ML–F5351–00 | 21 – 9 |
| 5S9–F5355–00 | 21 – 11 |
| 5ML–F5377–00 | 21 – 16 |
| 4C6–F580U–10 | 20 – 3 |
| 4C6–F582U–10 | 20 – 1 |
| 3GF–F5854–00 | 23 – 3 |
| 3GF–F5867–00 | 33 – 11 |
| 5ML–F5867–00 | 23 – 5 |
| 4C6–F5870–00 | 23 – 1 |
| 4C6–F5872–00 | 23 – 7 |
| 4C6–F5875–00 | 23 – 10 |
| 5ML–F5876–00 | 23 – 12 |
| 5ML–F5887–00 | 23 – 14 |
| 4C6–F5919–00 | 20 – 9 |
| 4C6–F5924–00 | 20 – 7 |
| 5ML–F6113–00 | 22 – 2 |
| 4C6–F6143–00–GE | 26 – 1 |
| 4C6–F6143–00–P0 | 26 – 1 |
| 4C6–F6143–00–PA | 26 – 1 |
| 4C6–F6143–00–PB | 26 – 1 |
| 4C6–F6145–01 | 26 – 6 |
| 3GF–F6199–00 | 24 – 6 |
| 4DH–F6199–01 | 24 – 7 |

| 部品番號 | 項次 |
|---|---|
| 5UA–F6240–00 | 22 – 7 |
| 5ML–F6241–01 | 22 – 6 |
| 5UA–F6270–01 | 22 – 8 |
| 3C9–F6280–00 | 26 – 9 |
| 3C9–F6290–00 | 26 – 13 |
| 1P3–F6294–00 | 26 – 11 |
| | 26 – 15 |
| 5NV–F629T–10 | 26 – 10 |
| | 26 – 14 |
| 4C6–F6301–00 | 22 – 9 |
| 5ML–F6351–01 | 22 – 13 |
| 3C9–F6356–00 | 26 – 16 |
| 5ML–F637G–00 | 22 – 17 |
| 1P3–F637H–00 | 22 – 19 |
| 3C9–F6386–00 | 26 – 12 |
| 5ML–F7113–00 | 24 – 15 |
| 5CA–F7114–00 | 24 – 21 |
| 5ML–F7114–00 | 24 – 10 |
| 5ML–F7117–00 | 24 – 11 |
| 5ML–F7121–00 | 24 – 14 |
| 5ML–F7254–00 | 24 – 17 |
| 5TY–F7311–00 | 24 – 18 |
| 5HK–F7475–00 | 24 – 8 |
| 4C6–F747A–00 | 14 – 16 |
| | 14 – 19 |
| 4C6–F747A–30 | 14 – 16 |
| | 14 – 19 |
| 4C6–F7481–00 | 24 – 1 |
| 5ML–F8100–00 | 12 – 32 |
| 5JS–F8257–40 | 25 – 15 |
| 4C6–F8300–00 | 25 – 11 |
| 1P5–F8315–10 | 25 – 19 |
| 5FM–F8349–00 | 25 – 14 |
| 5ML–F834E–00 | 25 – 2 |
| 5ML–F8372–01 | 25 – 3 |
| 4C6–F8385–01 | 25 – 26 |
| 5ML–F838N–00 | 25 – 21 |
| 5ML–F838R–00 | 25 – 22 |
| 5PN–F8445–00 | 25 – 18 |
| 4C6–H1410–00 | 27 – 2 |
| 1P5–H1450–00 | 27 – 1 |
| 4C6–H1800–00 | 28 – 1 |
| 3KW–H1801–00 | 28 – 3 |
| 3UH–H1828–01 | 28 – 5 |
| 4C6–H183G–00 | 28 – 7 |
| 4P9–H1940–00 | 34 – 5 |
| 5ML–H1960–00 | 34 – 3 |
| 1P3–H2100–10 | 34 – 20 |

| 部品番號 | 項次 |
|---|---|
| 4C6–H2121–00 | 18 – 22 |
| 1P5–H2151–00 | 34 – 27 |
| 5MH–H2151–00 | 34 – 28 |
| 5ML–H2151–20 | 34 – 29 |
| 1P5–H2310–00 | 34 – 6 |
| 1P5–H2370–00 | 34 – 8 |
| 4P9–H2372–00 | 34 – 9 |
| 4C6–H2501–20 | 34 – 21 |
| 4C6–H2511–00 | 34 – 23 |
| 5S9–H2541–00 | 34 – 30 |
| 4C6–H2590–20 | 34 – 26 |
| 5ML–H2910–00 | 33 – 1 |
| 4C6–H3310–10 | 29 – 1 |
| 5FM–H3311–10 | 29 – 2 |
| | 29 – 6 |
| | 32 – 6 |
| 4C6–H331J–00 | 29 – 3 |
| 4C6–H331R–00 | 29 – 7 |
| 4C6–H3320–10 | 29 – 5 |
| 4C6–H333M–00 | 32 – 7 |
| 5CA–H3350–10 | 34 – 32 |
| 4P9–H3371–00 | 34 – 33 |
| 4C6–H3510–21 | 30 – 1 |
| 4C6–H353G–11 | 30 – 2 |
| 4C6–H353K–01 | 30 – 3 |
| 4C6–H3550–00 | 30 – 5 |
| 4C6–H3720–00 | 32 – 9 |
| 5ML–H3912–00 | 33 – 2 |
| 5ML–H3922–00 | 33 – 6 |
| 5NV–H3945–00 | 33 – 4 |
| 4C6–H3973–11 | 33 – 13 |
| 4C6–H3976–10 | 33 – 15 |
| 5ML–H3980–00 | 33 – 7 |
| 5ML–H3980–10 | 33 – 3 |
| 4C6–H430A–30 | 31 – 2 |
| 4C6–H4310–30 | 31 – 1 |
| 1B6–H4314–00 | 31 – 3 |
| 4C6–H4325–00 | 32 – 8 |
| | 32 – 10 |
| 4C6–H4340–00 | 31 – 5 |
| 5SK–H4347–00 | 31 – 4 |
| | 32 – 5 |
| 4C6–H4396–00 | 31 – 6 |
| 4C6–H4526–00 | 32 – 11 |
| 4C6–H4700–30 | 32 – 1 |
| 4C6–H4724–00 | 32 – 4 |
| 4C6–H472C–30 | 32 – 2 |
| 4C6–H4743–00 | 32 – 3 |

| 部品番號 | 項次 |
|---|---|
| 4C6–H4751–00 | 32 – 20 |
| 4C6–H4797–00 | 32 – 12 |
| 4C6–H4797–00 | 32 – 24 |
| 4C6–F6301–00 | 34 – 1 |
| 4C6–F6301–00 | 23 – 2 |
| 4C6–W0045–00 | 20 – 8 |
| 5NW–W0047–00 | 20 – 5 |
| 5AG–W0048–00 | 20 – 6 |
| 4C6–W0054–10 | 16 – 55 |
| 5NW–W0057–00 | 20 – 4 |
| 5ML–W8180–00 | 28 – 2 |
| 5TY–WE442–10 | 6 – 13 |
| 5ML–WE512–01 | 8 – 2 |
| 5ML–WE763–00 | 10 – 9 |
| 5ML–F6351–01 | 16 – 1 |
| 4C6–WH250–20–A0 | 34 – 22 |
| 4C6–WH250–20–C0 | 34 – 22 |
| 4C6–X7482–00–GE | 14 – 14 |
| 4C6–X7482–00–PA | 14 – 14 |
| 4C6–X7482–00–PB | 14 – 14 |
| 4C6–X7482–10–P0 | 14 – 14 |
| 4C6–X7492–00–GE | 14 – 18 |
| 4C6–X7492–00–PA | 14 – 18 |
| 4C6–X7492–00–PB | 14 – 18 |
| 4C6–X7492–10–P0 | 14 – 18 |
| 4C6–XE543–00 | 8 – 52 |
| 5ML–XE547–00 | 8 – 46 |
| 5ML–XF161–01 | 13 – 9 |
| 4C6–XF172–00–0Y | 14 – 4 |
| 4C6–XF172–00–5X | 14 – 4 |
| 4C6–XF172–00–8X | 14 – 4 |
| 4C6–XF172–00–9X | 14 – 4 |
| 4C6–XF173–00–0Y | 14 – 9 |
| 4C6–XF173–00–5X | 14 – 9 |
| 4C6–XF173–00–8X | 14 – 9 |
| 4C6–XF173–00–9X | 14 – 9 |
| 4C6–XF253–01 | 12 – 29 |
| 5ML–XF533–00 | 21 – 6 |
| 4C6–XF611–00 | 22 – 1 |
| 5ML–XF711–00 | 24 – 9 |
| 4C6–XF831–00–P0 | 25 – 1 |
| 4C6–XF831–00–PB | 25 – 1 |
| 4C6–XF831–10–GE | 25 – 1 |
| 1P3–F637H–00 | 25 – 1 |
| 4P9–XF834–00–GE | 25 – 17 |
| 4P9–XF834–00–P0 | 25 – 17 |
| 4P9–XF834–00–P7 | 25 – 17 |
| 4C6–H4743–00 | 25 – 17 |

| 部品番號 | 項次 |
|---|---|
| 4C6–XH212–00 | 18 – 20 |
| 4C6–XH219–00 | 18 – 17 |
| 5ML–Y1310–20 | 1 – 22 |
| 90101–06278 | 21 – 12 |
| 90101–10875 | 15 – 12 |
| 90105–06806 | 8 – 39 |
| 90105–06807 | 8 – 38 |
| 90105–06808 | 8 – 9 |
| 90105–06809 | 8 – 37 |
| 90105–06810 | 8 – 10 |
| 90105–06817 | 8 – 11 |
| 90105–08121 | 15 – 11 |
| 90105–08813 | 18 – 12 |
| 90105–08835 | 7 – 19 |
| 90105–10036 | 22 – 4 |
| 90105–10638 | 20 – 10 |
| 90109–063F1 | 17 – 39 |
| | 18 – 10 |
| | 25 – 25 |
| 90109–06577 | 33 – 8 |
| 90109–06849 | 32 – 15 |
| 90109–06876 | 13 – 3 |
| 90109–10005 | 24 – 19 |
| 90110–06256 | 6 – 9 |
| 90110–06813 | 8 – 21 |
| 90110–06815 | 8 – 22 |
| 90111–06801 | 7 – 12 |
| 90116–08806 | 1 – 5 |
| 90119–05004 | 34 – 24 |
| 90119–05071 | 17 – 35 |
| | 18 – 16 |
| 90119–06821 | 13 – 5 |
| | 24 – 2 |
| 90119–06857 | 4 – 10 |
| 90119–06864 | 17 – 17 |
| 90119–06874 | 24 – 3 |
| 90119–06875 | 17 – 5 |
| 90149–08814 | 20 – 2 |
| 90154–06807 | 13 – 2 |
| 90155–04800 | 17 – 22 |
| 90159–05028 | 26 – 3 |
| 90159–05802 | 26 – 4 |
| 90159–05831 | 14 – 17 |
| | 14 – 20 |
| 90159–06822 | 25 – 16 |
| 90159–06827 | 25 – 5 |
| 90160–05803 | 26 – 7 |
| 90169–05001 | 25 – 13 |

| 部品番號 | 項次 |
|---|---|
| 90170–05800 | 3 – 10 |
| 90170–36279 | 10 – 29 |
| 90176–06065 | 18 – 24 |
| 90176–08816 | 1 – 16 |
| 90179–06833 | 32 – 16 |
| 90179–06843 | 22 – 14 |
| 90179–08804 | 7 – 16 |
| 90179–12248 | 27 – 6 |
| 90179–14427 | 10 – 5 |
| 90179–25615 | 16 – 52 |
| 90183–05803 | 25 – 6 |
| 90183–05807 | 13 – 7 |
| | 14 – 6 |
| | 14 – 11 |
| | 17 – 28 |
| | 18 – 7 |
| | 24 – 4 |
| | 25 – 20 |
| | 25 – 30 |
| | 26 – 2 |
| | 32 – 18 |
| 90183–06801 | 31 – 8 |
| 90185–10110 | 24 – 20 |
| 90185–10801 | 12 – 4 |
| | 12 – 12 |
| | 22 – 5 |
| 90185–14124 | 21 – 4 |
| 90201–04325 | 34 – 16 |
| 90201–06055 | 7 – 11 |
| 90201–06557 | 32 – 22 |
| 90201–08609 | 1 – 15 |
| 90201–08810 | 24 – 13 |
| 90201–10118 | 23 – 9 |
| 90201–101J1 | 7 – 17 |
| | 15 – 14 |
| 90201–105A2 | 12 – 5 |
| | 12 – 8 |
| 90201–108A3 | 9 – 9 |
| 90201–12172 | 8 – 55 |
| 90201–12688 | 27 – 5 |
| 90201–144M8 | 10 – 6 |
| 90201–15803 | 11 – 2 |
| 90201–16802 | 9 – 4 |
| | 10 – 16 |
| 90201–20276 | 21 – 5 |
| 90202–15803 | 12 – 10 |
| 90202–26142 | 16 – 53 |
| 90208–12050 | 10 – 15 |

| 部品番號 | 項次 |
|---|---|
| 90208–15801 | 11 – 3 |
| 90208–25800 | 11 – 7 |
| 90241–10015 | 18 – 5 |
| 90249–12008 | 22 – 15 |
| 90269–06806 | 18 – 19 |
| 90280–03045 | 2 – 9 |
| 90340–12802 | 8 – 54 |
| 90387–062M9 | 25 – 27 |
| 90387–06737 | 7 – 13 |
| 90387–067N5 | 25 – 9 |
| 90387–06819 | 8 – 44 |
| 90387–06868 | 13 – 12 |
| | 18 – 23 |
| | 32 – 17 |
| 90387–068F9 | 4 – 5 |
| 90387–07598 | 17 – 18 |
| 90387–125J1 | 19 – 10 |
| 90387–153N8 | 15 – 7 |
| 90387–15423 | 15 – 5 |
| 90387–16801 | 10 – 13 |
| 90401–10805 | 23 – 8 |
| 90430–08816 | 8 – 15 |
| 90430–10802 | 34 – 11 |
| 90445–32800 | 24 – 23 |
| 90446–13803 | 8 – 6 |
| 90450–53061 | 25 – 24 |
| 90450–60001 | 17 – 12 |
| 90461–15801 | 17 – 26 |
| 90464–09801 | 12 – 18 |
| 90464–10800 | 4 – 16 |
| 90464–11801 | 12 – 17 |
| 90464–12812 | 12 – 21 |
| | 22 – 12 |
| 90464–16803 | 12 – 19 |
| 90464–20809 | 12 – 22 |
| 90464–25803 | 34 – 19 |
| 90464–26800 | 6 – 25 |
| | 12 – 28 |
| 90464–40801 | 12 – 20 |
| 90465–13152 | 34 – 34 |
| 90467–08003 | 17 – 24 |
| 90467–08075 | 17 – 41 |
| 90467–09006 | 17 – 30 |
| | 17 – 42 |
| 90467–10041 | 17 – 33 |
| | 17 – 37 |
| | 17 – 45 |
| 90467–11106 | 17 – 44 |

| 部品番號 | 項次 |
|---|---|
| 90467–12052 | 8 – 7 |
| | 17 – 36 |
| 90467–13042 | 1 – 24 |
| 90467–13813 | 6 – 18 |
| 90467–20810 | 17 – 15 |
| 90468–08812 | 17 – 14 |
| 90480–01326 | 17 – 20 |
| 90480–10332 | 7 – 20 |
| 90480–12497 | 4 – 15 |
| 90480–12809 | 7 – 14 |
| 90480–13398 | 25 – 8 |
| 90480–18290 | 17 – 19 |
| 90501–10312 | 33 – 10 |
| 90501–16004 | 5 – 12 |
| 90501–16801 | 22 – 16 |
| 90501–43801 | 10 – 25 |
| 90506–13800 | 21 – 7 |
| 90506–16802 | 21 – 8 |
| 90506–26803 | 24 – 22 |
| 90506–40800 | 24 – 16 |
| 91317–04025 | 34 – 15 |
| 91317–06012 | 3 – 24 |
| 91317–06016 | 3 – 22 |
| 91317–06025 | 23 – 6 |
| | 33 – 12 |
| 91317–06100 | 1 – 21 |
| 91810–14807 | 1 – 19 |
| | 1 – 20 |
| | 8 – 8 |
| | 8 – 20 |
| | 22 – 11 |
| 92990–06600 | 7 – 3 |
| | 19 – 3 |
| 93102–19293 | 8 – 33 |
| 93102–22820 | 10 – 3 |
| 93102–22843 | 8 – 12 |
| 93102–26852 | 11 – 11 |
| 93104–41801 | 10 – 22 |
| 93106–26823 | 15 – 4 |
| 93109–21800 | 10 – 8 |
| 93109–28811 | 15 – 3 |
| 93210–09802 | 1 – 4 |
| 93210–09859 | 21 – 15 |
| 93210–14802 | 21 – 17 |
| 93210–14805 | 8 – 17 |
| 93210–15862 | 3 – 25 |
| 93210–26668 | 28 – 6 |
| 93210–29800 | 5 – 13 |

| 部品番號 | 項次 |
|---|---|
| 93210–29802 | 6 – 8 |
| 93210–43800 | 10 – 23 |
| 93210–54008 | 1 – 14 |
| 93210–55669 | 28 – 4 |
| 93210–71462 | 1 – 11 |
| 93211–07801 | 8 – 34 |
| 93306–003Y4 | 8 – 56 |
| 93306–201Y7 | 19 – 4 |
| 93306–203XA | 10 – 30 |
| 93306–204YH | 11 – 10 |
| 93306–27210 | 10 – 2 |
| 93306–301XD | 11 – 12 |
| 93306–301YA | 19 – 5 |
| 93306–302X1 | 15 – 6 |
| 93306–303Y8 | 11 – 9 |
| 93306–372Y3 | 2 – 7 |
| 93310–450X2 | 9 – 2 |
| 93310–528Y9 | 2 – 3 |
| 93311–315Y2 | 11 – 4 |
| 93315–110Y6 | 9 – 7 |
| 93450–16068 | 2 – 12 |
| 93610–20800 | 8 – 25 |
| 93900–00805 | 19 – 7 |
| | 21 – 3 |
| 94111–12803 | 19 – 6 |
| 94112–12804 | 21 – 2 |
| 94568–75094 | 3 – 16 |
| 94700–00840 | 1 – 17 |
| 95027–06010 | 8 – 31 |
| 95027–06012 | 9 – 11 |
| | 9 – 13 |
| | 34 – 35 |
| 95027–06016 | 1 – 25 |
| 95027–06020 | 1 – 12 |
| 95307–06700 | 34 – 31 |
| 95307–10800 | 15 – 13 |
| 95307–12700 | 10 – 19 |
| 95604–08200 | 24 – 12 |
| 95607–05100 | 33 – 5 |
| 95607–06100 | 32 – 23 |
| | 33 – 9 |
| 95607–12200 | 19 – 8 |
| 95707–06500 | 18 – 4 |
| | 25 – 10 |
| | 25 – 28 |
| | 33 – 16 |
| 95707–10500 | 21 – 14 |
| 95807–06010 | 12 – 14 |

| 部品番號 | 項次 |
|---|---|
| 95807–06010 | 12 – 16 |
| | 12 – 25 |
| 95807–06010 | 22 – 18 |
| | 23 – 11 |
| 90480–12809 | 12 – 31 |
| | 23 – 13 |
| | 23 – 15 |
| | 32 – 21 |
| 95807–06016 | 13 – 11 |
| | 18 – 14 |
| 95807–06030 | 6 – 23 |
| 9580L–06010 | 16 – 45 |
| 95817–06030 | 6 – 4 |
| 95817–08016 | 3 – 15 |
| | 8 – 14 |
| 95817–10035 | 7 – 18 |
| 95827–06012 | 22 – 20 |
| 95827–08040 | 15 – 2 |
| 95827–10045 | 12 – 7 |
| 97027–05012 | 12 – 27 |
| 97080–06008 | 7 – 2 |
| 97507–05520 | 17 – 8 |
| 97507–06525 | 28 – 8 |
| 97527–06512 | 1 – 9 |
| | 34 – 18 |
| 97607–06220 | 4 – 13 |
| | 34 – 4 |
| 97607–06225 | 27 – 4 |
| 97707–50012 | 14 – 2 |
| | 14 – 3 |
| | 14 – 7 |
| | 14 – 12 |
| | 18 – 9 |
| | 25 – 29 |
| | 33 – 14 |
| 97707–50014 | 17 – 27 |
| 97707–50016 | 13 – 6 |
| | 14 – 8 |
| | 14 – 13 |
| | 22 – 3 |
| | 24 – 5 |
| | 25 – 7 |
| | 25 – 12 |
| | 26 – 5 |
| | 26 – 8 |
| | 29 – 4 |
| | 29 – 8 |
| | 30 – 4 |

| 部品番號 | 項次 |
|---|---|
| 97707–50016 | 32 – 13 |
| | 32 – 19 |
| | 34 – 2 |
| 97707–60020 | 31 – 7 |
| 97707–60516 | 4 – 12 |
| 97707–60530 | 4 – 8 |
| 98507–05010 | 22 – 10 |
| 98507–05020 | 5 – 9 |
| 98507–06014 | 34 – 25 |
| 98507–06016 | 27 – 3 |
| 98507–06018 | 34 – 7 |
| 98780–04012 | 23 – 4 |
| 98907–06016 | 8 – 45 |
| 98907–06020 | 8 – 51 |
| 99009–25400 | 11 – 8 |
| 99480–05010 | 8 – 36 |